DATA SHEET

Premium Efficiency Motor: **ODP5-36-182T,** **60 Hz**

WorldWide Electric Corporation
1 (800) 808-2131
Worldwideelectric.net

Document Generated: 31-Mar-2025
Document ID:

Customer:

MOTOR INFORMATION

HP	5
RPM	3600
Phase	3
Frequency	60
Voltage	230/460
Frame Size	182/4T
Enclosure	ODP
Degree of Protection	IP23
Service Factor	1.15
Poles	2
Full Load Speed	3509
Insulation Class	F
Temp Rise	80˚C
NEMA Code Letter	J
Duty Cycle	S1 / Continuous
Slip	2.53%
NEMA Design	B
Moment of Inertia	0.151 lb.ft.^2
Locked Rotor Time (Hot)	12 seconds
Sound Pressure Level	70 dB(A)
Number of Starts	2 Cold / 1 Hot
Max Ambient Temperature	40˚C
Max Elevation	1000 m.a.s.l (3300 f.a.s.l)
Mounting	F1
Rotation	Bi-Directional
Area of Classification	Safe Area
Inverter Rating	10:1 CT / 20:1 VT
Standard	NEMA MG 1
Approvals	UL, CE

ADDITIONAL DATA

F2 Suitable	No
Shaft Material	AISI 1045
Connection Diagram	9 Lead Wye
Approximate Weight	64.9 lbs.

EFFICIENCY/POWER FACTOR

LOAD	EFF	P. F.
100%	86.5 %	0.89
75%	89.1 %	0.86
50%	88.2 %	0.79

TORQUE

FULL LOAD	LRT	BDT
7.43 lb.ft.	340 %	352 %

AMPERAGE INFORMATION

	230V	460V
Full Load Amps	11.8A	5.9A
Locked Rotor Amps	94.02A	47.01A
No Load Current	3.64A	1.82A

Usable at 208V	2.99A

BEARING INFORMATION

DE Bearing	6306ZZ
ODE Bearing	6305ZZ
Grease Type	NSK SN7
DE Regreasing Interval	-- Hours
ODE Regreasing Interval	-- Hours
Grease Quantity	--

This document is the property of WorldWide Electric Corporation and may not be reproduced without express authorization

MOTOR DRAWING

Premium Efficiency Motor: **ODP5-36-182T**

WorldWide Electric Corporation
1 (800) 808-2131
Worldwideelectric.net

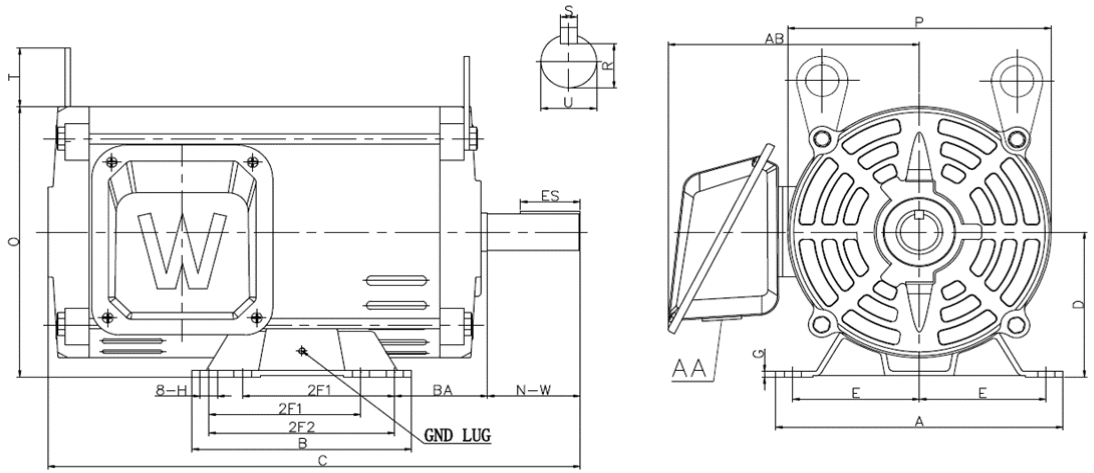

DIMENSION - INCHES

MOUNTING					A	B	C	D	G	P	O	T	AB
E	2F1	2F2	H	BA									
3.75	4.5	5.5	0.41	2.75	8.5	6.495	16.4	4.5	0.41	7.72	8.36	1.6	7.55

SHAFT & KEY				
S	ES	R	N-W	U
0.25	1.78	0.986	2.75	1.125

T-BOX	GND
AA	LUG
1.09	M5*P0.8

This document is the property of WorldWide Electric Corporation and may not be reproduced without express authorization

PERFORMANCE CURVES

Premium Efficiency Motor: **ODP5-36-182T**

WorldWide Electric Corporation
1 (800) 808-2131
Worldwideelectric.net

Document Generated:	31-Mar-2025
Document ID:	

Customer:

Motor Type	ODP						
Output Rating (HP)	5		FL Speed	3509			
Full Load Torque	7.43	lb.ft	LRT (%FLT)	340	460 volt FLA	5.9	
Rotor Wk^2	0.865	lb-ft^2	BDT (%FLT)	352	230 volt FLA	11.8	

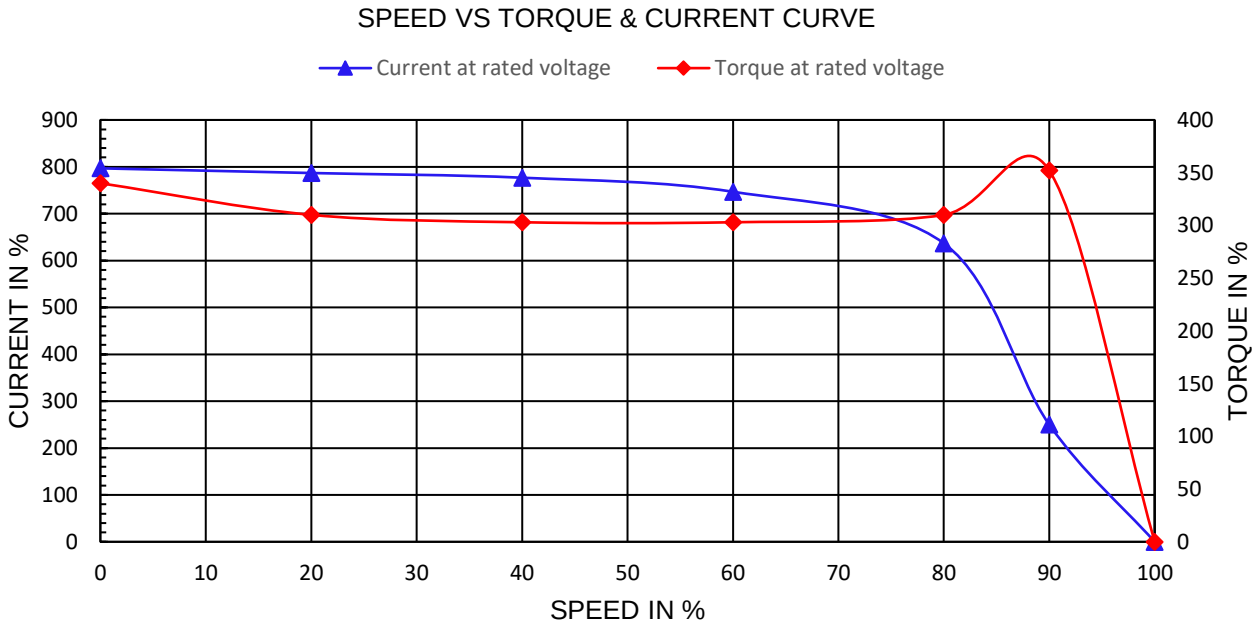

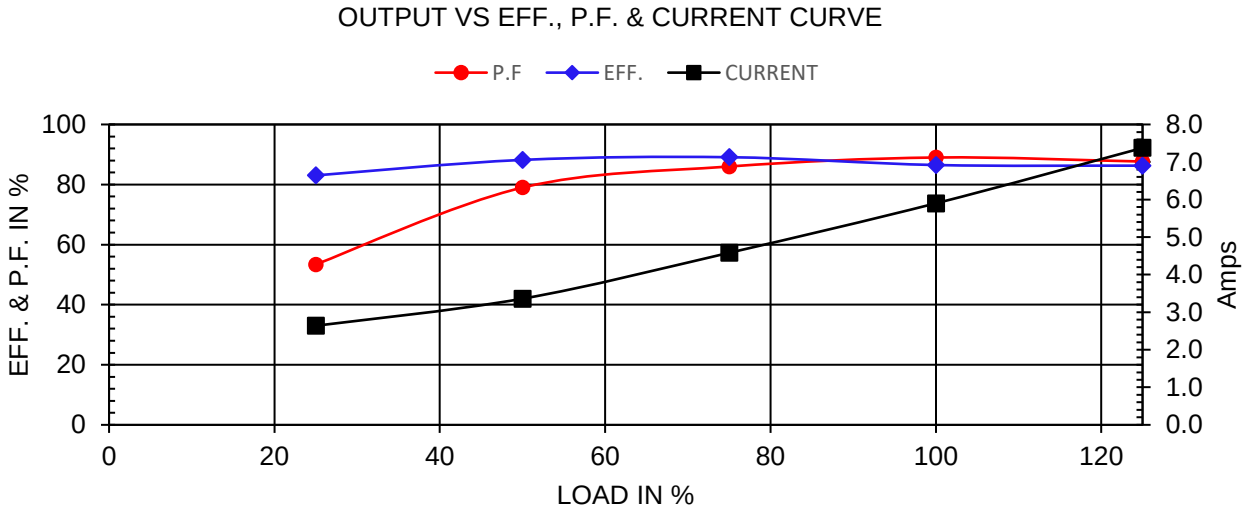

This document is the property of WorldWide Electric Corporation and may not be reproduced without express authorization.

NAMEPLATE / WIRING

Premium Efficiency Motor: **ODP5-36-182T**

WorldWide Electric Corporation
1 (800) 808-2131
Worldwideelectric.net

Document Generated:	31-Mar-2025
Document ID:	

Customer:

SAMPLE NAMEPLATE DATA

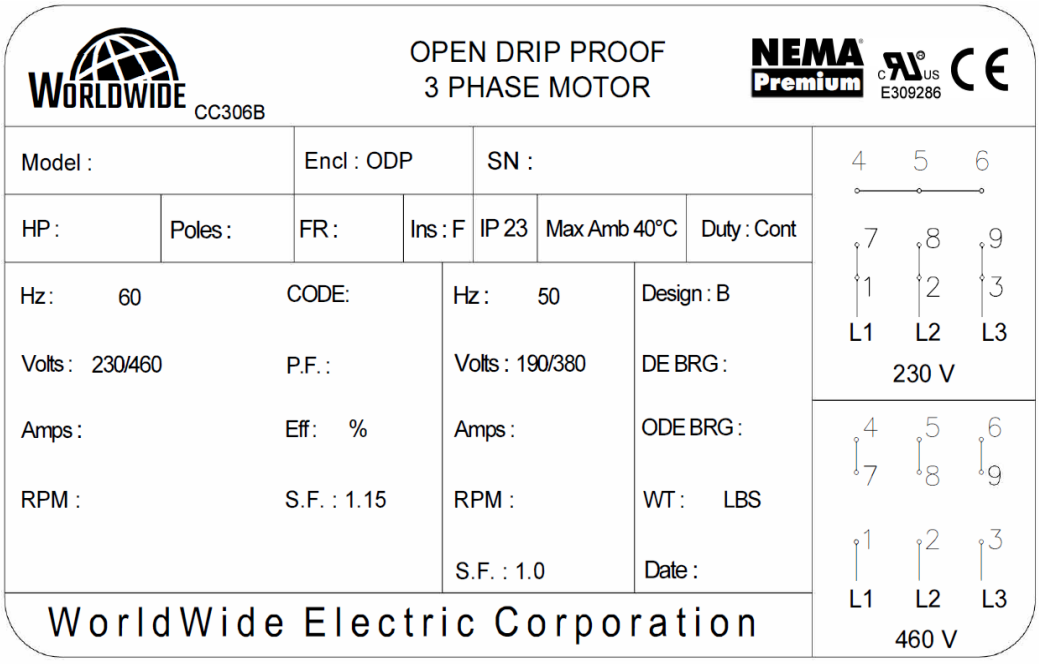

Model:	ODP5-36-182T			**Encl:**	ODP				
HP:	5	**Poles:**	2	**Frame**	182/4T	**Ins Cl:**	F	**IP**	IP23
Hz:	60	**Code:**	J	**Hz:**	50	**Design:**	B		
Volts:	230/460	**P.F.:**	0.89	**Volts:**	190/380	**DE Brg:**	6306ZZ		
Amps:	11.8/5.9	**Eff:**	86.5%	**Amps:**	13.6/6.8	**ODE Brg:**	6305ZZ		
RPM:	3509	**S.F.:**	1.15	**RPM:**	2919	**WT:**	64.9 lbs.		
				S.F.:	1.0				

This document is the property of WorldWide Electric Corporation and may not be reproduced without express authorization