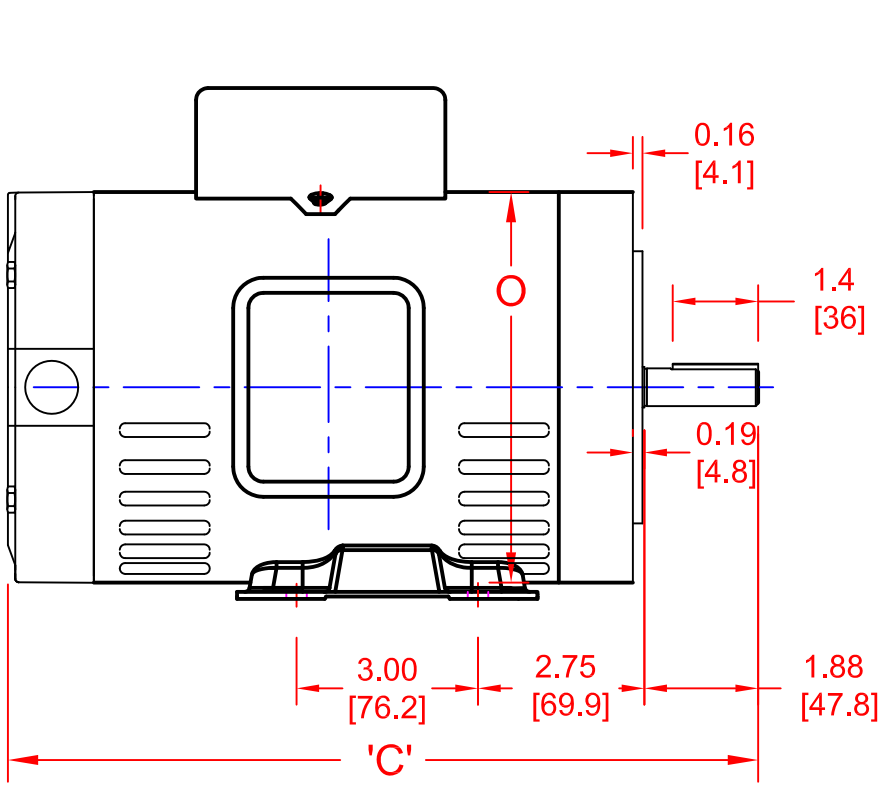

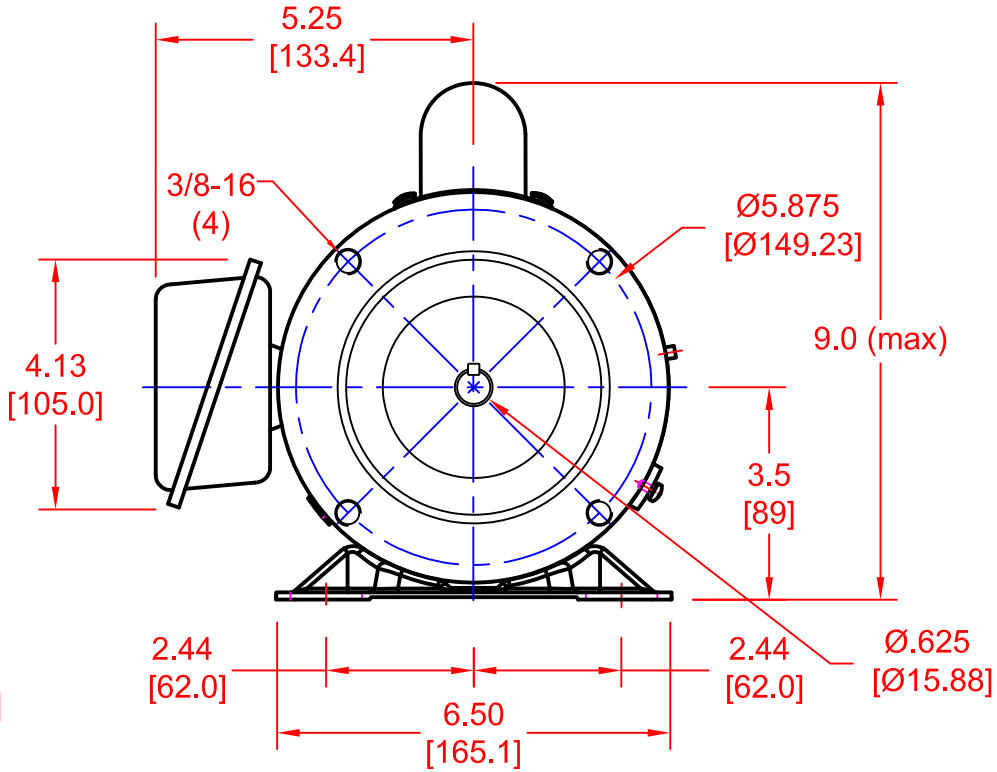

DIMENSIONS

For AC motors, single phase, 56C TEFC

All motors come with 56C face and removable base dual mounting

Part No.	HP	'O' (Max)	'C' (Max)
MA0503C	1/3	6.5"	11.6"
MA0505C	1/2	6.5"	11.6"
MA0507C	3/4	6.5"	12.6"

UNLESS OTHERWISE SPECIFIED
ALL DIMENSIONS ARE IN INCHES
INTERPRET DIM AND TOL PER ASME Y14.5M – 1994
TOLERANCES:
DECIMALS .XX ±.010 .XXX ±.005 .XXXX ±.0005
FRACTIONAL ± 1/32
ANGULAR ± 30'
BREAK ALL EDGES
ALL HOLES CHAMFERED .01x45°
SURFACE ROUGHNESS: 125 μIN BEFORE PLATING
THIRD ANGLE PROJECTION

THIS DRAWING AND THE INFORMATION ON IT ARE THE PROPERTY OF HALLMARK INDUSTRIES, INC. AND IS NOT TO BE USED OR DUPLICATED WITHOUT PRIOR AUTHORIZATION

HALLMARK INDUSTRIES, INC.
624 ESTES AVE, SCHAUMBURG, IL 60193 PHONE: (847)301-8050 FAX: (847)301-8839

TITLE: OUTLINE, AC MOTOR, MA05
SINGLE PHASE 56C ODP

DRAWN | DRAWN DATE | CHECKED | CHECK DATE

SIZE B | DWG NO. MA05 | REV –

SCALE 1:2 | ALT. NO. | SHEET 1 OF 1