ABB BALDOR RELIANCE

Customer information packet

VM3539

.5HP, 1140RPM, 3PH, 60HZ, 56C, 3418M, TEFC, F1
Class - None
Division - Not Applicable

Copyright © All product information within this document is subject to ABB Motors and Mechanical Inc. copyright © protection, unless otherwise noted.
11/5/2026 2:52:16 PM

Specifications

Enclosure	TEFC
Frame	56C
Frame Material	Steel
Frequency	60.00 Hz
Haz Area Class and Group	None
Haz Area Division	Not Applicable
Motor Letter Type	Three Phase
Output @ Frequency	.500 HP @ 60 HZ
Phase	3
Synchronous Speed @ Frequency	1200 RPM @ 60 HZ
Voltage @ Frequency	230.0 V @ 60 HZ
	460.0 V @ 60 HZ
Agency Approvals	C UR US
Ambient Temperature	40 °C
Auxiliary Box	NO AUXILLARY BOX
Auxiliary Box Lead Termination	None
Base Indicator	No Mounting
Bearing Grease Type	Polyrex EM (-20F +300F)
Blower	None
Current @ Voltage	1.200 A @ 460.0 V
	2.400 A @ 230.0 V
	2.700 A @ 208.0 V
Design Code	B
Drip Cover	No Drip Cover
Duty Rating	CONT
Efficiency @ 100% Load	72.0 %
Electrically Isolated Bearing	Not Electrically Isolated
Feedback Device	NO FEEDBACK
Front Face Code	Standard
Front Shaft Indicator	None
Heater Indicator	No Heater
High Voltage Full Load Amps	1.2 a

Part Detail

Revision	AH
Type	AC
Mech. spec.	34A063
Base	
Status	PRD/A
Elec. spec.	34WG5884
Layout	34LYA063
Eff. date	02-10-2025
CD Diagram	CD0005
Poles	06
Leads	9#18
Proprietary	False
Created date	01-01-0001

Insulation Class	B
Inverter Code	Not Inverter
KVA Code	J
Lifting Lugs	No Lifting Lugs
Locked Bearing Indicator	Locked Bearing
Motor Lead Exit	Ko Box
Motor Lead Quantity/Wire Size	9 @ 18 AWG
Motor Lead Termination	Flying Leads
Motor Standards	NEMA
Motor Type	3418M
Mounting Arrangement	F1
Number of Poles	6
Overall Length	11.35 IN
Power Factor	55
Product Family	General Purpose
Pulley End Bearing Type	Ball
Pulley Face Code	C-Face
Pulley Shaft Indicator	Standard
Rodent Screen	None
RoHS Status	ROHS COMPLIANT
Service Factor	1.25
Shaft Diameter	0.625 IN
Shaft Extension Location	Pulley End
Shaft Ground Indicator	No Shaft Grounding
Shaft Rotation	Reversible
Shaft Slinger Indicator	No Slinger
Speed	1140 rpm
Speed Code	Single Speed
Starting Method	Direct on line
Thermal Device - Bearing	None
Thermal Device - Winding	None
Vibration Sensor Indicator	No Vibration Sensor
Winding Thermal 1	None
Winding Thermal 2	None

Nameplate

	NP1256L							
CAT.NO.	VM3539							
SPEC.	34A63-5884							
HP	.5							
VOLTS	230/460							
AMP	2.4/1.2							
RPM	1140							
FRAME	56C	**HZ**	60			**PH**	3	
SER.F.	1.25	**CODE**	J	**DES**	B	**CLASS**	B	
NEMA-NOM-EFF	72	**PF**	55					
RATING	40C AMB-CONT							
CC								
DE	6203	**ODE**	6203					
ENCL	TEFC	**SN**						
	SFA 2.6/1.3							

AC Induction Motor Performance Data
Record # 6835
Typical performance - not guaranteed values

Winding: 34WG5884-R001	**Type:** 3418M	**Enclosure:** TEFC

Nameplate Data				**460 V, 60 Hz: High Voltage Connection**	
Rated Output (HP)			.5	**Full Load Torque**	2.3 LB-FT
Volts			230/460	**Start Configuration**	direct on line
Full Load Amps			2.4/1.2	**Breakdown Torque**	7.7 LB-FT
R.P.M.			1140	**Pull-up Torque**	6 LB-FT
Hz	60	**Phase**	3	**Locked-rotor Torque**	6.2 LB-FT
NEMA Design Code	B	**KVA Code**	J	**Starting Current**	5 A
Service Factor (S.F.)			1.25	**No-load Current**	0.95 A
NEMA Nom. Eff.	72	**Power Factor**	55	**Line-line Res. @ 25ºC**	39.6 Ω
Rating - Duty			40C AMB-CONT	**Temp. Rise @ Rated Load**	63°C
S.F. Amps			2.6/1.3	**Temp. Rise @ S.F. Load**	77°C

Load Characteristics 460 V, 60 Hz, 0.5 HP

% of Rated Load	**25**	**50**	**75**	**100**	**125**	**150**	**S.F.**
Power Factor	20	34	45	55	62	68	62
Efficiency	48	63	67	72	72	71	72
Speed	1185	1170	1155	1140	1120	1100	1120
Line amperes	0.95	1	1.1	1.2	1.3	1.5	1.3

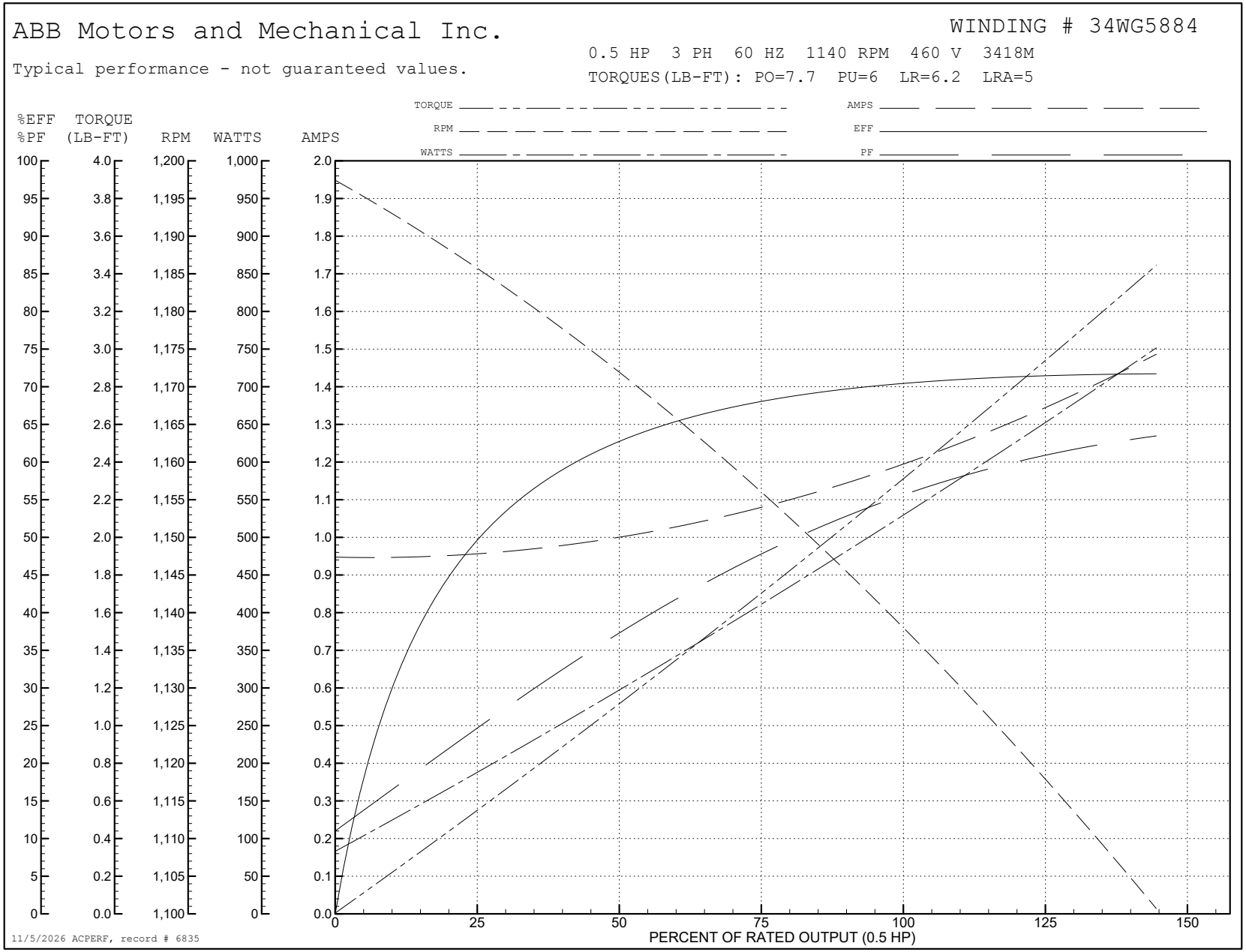
ABB Motors and Mechanical Inc.
WINDING # 34WG5884
Typical performance - not guaranteed values.
0.5 HP 3 PH 60 HZ 1140 RPM 460 V 3418M
TORQUES(LB-FT): PO=7.7 PU=6 LR=6.2 LRA=5
TORQUE
RPM
WATTS
AMPS
EFF
PF
%EFF %PF
TORQUE (LB-FT)
RPM
WATTS
AMPS
PERCENT OF RATED OUTPUT (0.5 HP)
11/5/2026 ACPERF, record # 6835

34LYA063

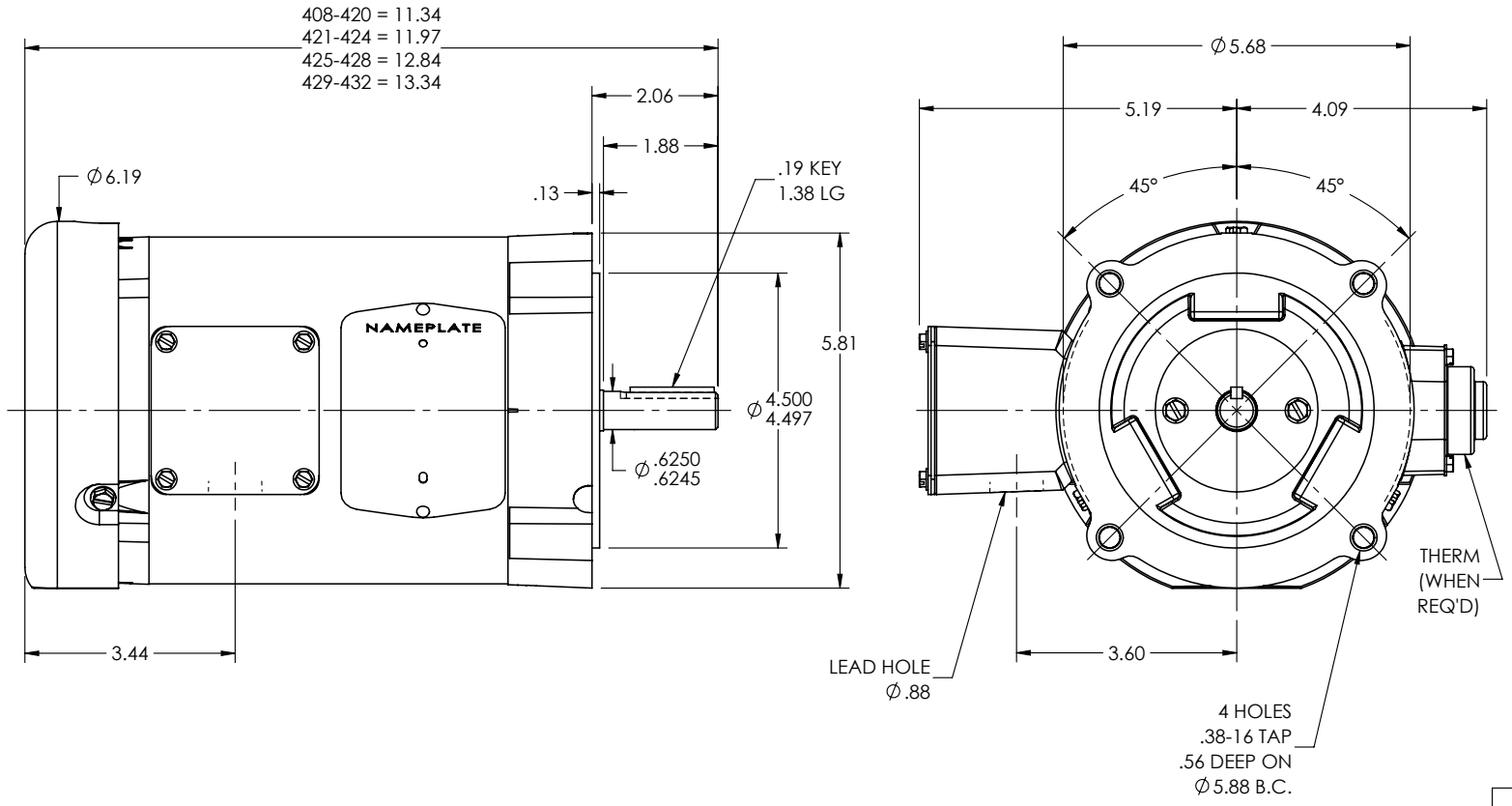

CUSTOMER IS RESPONSIBLE FOR DETERMINING THAT THE PRODUCT WILL PERFORM SUITABLY IN THE INTENDED APPLICATION

REV. DESC: CLEAN UP DIMENSIONING			
REV: P	VERSION: 05	REVISED: 08:51:08 10/31/2024	TDR: 000001243684
34LYA063	MODEL NO. 34LYA063		REF: -
	BY: ENJEFD0		

BALDOR - RELIANCE®

STD VERT 34M NEMA 56C TEFC

34LYA063

CD0005

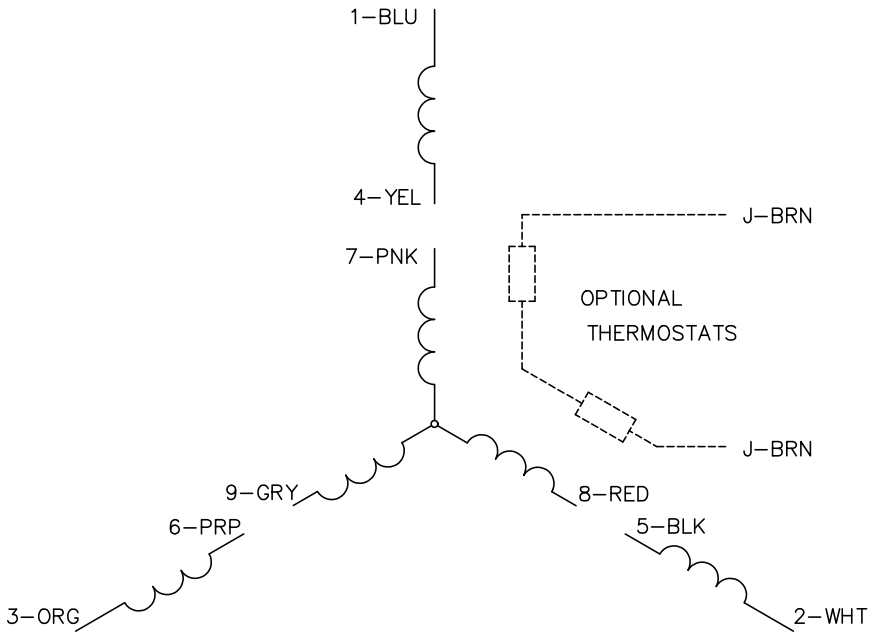

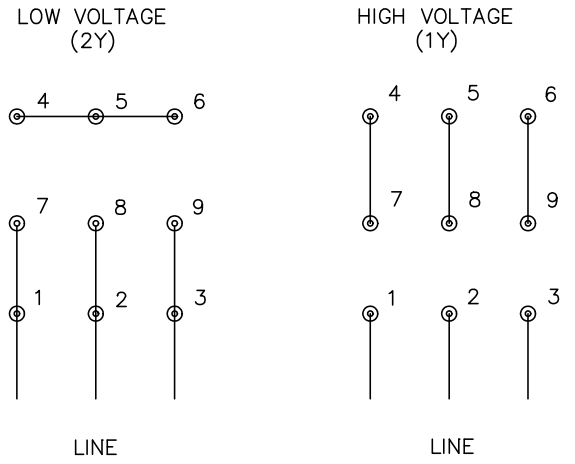

NOTES:

1. INTERCHANGE ANY TWO LINE LEADS TO REVERSE ROTATION.
2. OPTIONAL THERMOSTATS ARE PROVIDED WHEN SPECIFIED.
3. ACTUAL NUMBER OF INTERNAL PARALLEL CIRCUITS MAY BE A MULTIPLE OF THOSE SHOWN ABOVE.
4. LEAD COLORS ARE OPTIONAL. LEADS MUST ALWAYS BE NUMBERED AS SHOWN.

CD0005

REV. DESC: REVISE TO SHOW OPTIONAL COLORS			BALDOR ELECTRIC Co.
REV. LTR: E	BY: JLP	REVISED: 01/19/99 10:15	TDR: 0171435
CD0005		FILE: AAA00005140	MDL: –
		MTL: –	3PH, DV, 9 LEADS