ABB BALDOR RELIANCE

Customer information packet

L3516T

2HP, 1720RPM, 1PH, 60HZ, 145T, 3546LC, TEFC, F1
Class - None
Division - Not Applicable

Copyright © All product information within this document is subject to ABB Motors and Mechanical Inc. copyright © protection, unless otherwise noted.
11/5/2026 4:53:41 PM

Specifications

Enclosure	TEFC
Frame	145T
Frame Material	Steel
Frequency	60.00 Hz
Haz Area Class and Group	None
Haz Area Division	Not Applicable
Motor Letter Type	Cap Start, Cap Run
Output @ Frequency	2.000 HP @ 60 HZ
Phase	1
Synchronous Speed @ Frequency	1800 RPM @ 60 HZ
Voltage @ Frequency	115.0 V @ 60 HZ
	230.0 V @ 60 HZ
Agency Approvals	C UR US
Ambient Temperature	40 °C
Auxiliary Box	NO AUXILLARY BOX
Auxiliary Box Lead Termination	None
Base Indicator	Rigid
Bearing Grease Type	Polyrex EM (-20F +300F)
Blower	None
Current @ Voltage	15.800 A @ 115.0 V
	7.900 A @ 230.0 V
Design Code	L
Drip Cover	No Drip Cover
Duty Rating	CONT
Efficiency @ 100% Load	80.0 %
Electrically Isolated Bearing	Not Electrically Isolated
Feedback Device	NO FEEDBACK
Front Shaft Indicator	None
Heater Indicator	No Heater
High Voltage Full Load Amps	7.9 a
Insulation Class	F
Inverter Code	Not Inverter

Part Detail

Revision	M
Type	AC
Mech. spec.	35EE001
Base	
Status	PRD/A
Elec. spec.	35WGG243
Layout	35LYEE001
Eff. date	11-13-2025
CD Diagram	CD0016A01
Poles	04
Leads	4#16 A PH,3#18 B PH
Proprietary	False
Created date	08-01-2022

KVA Code	J
Lifting Lugs	No Lifting Lugs
Locked Bearing Indicator	No Locked Bearing
Motor Lead Quantity/Wire Size	4 @ 16 AWG, A PH
Motor Lead Termination	Flying Leads
Motor Standards	NEMA
Motor Type	3546LC
Mounting Arrangement	F1
Number of Poles	4
Overall Length	15.53 IN
Power Factor	90
Product Family	General Purpose
Pulley End Bearing Type	Ball
Pulley Face Code	Standard
Pulley Shaft Indicator	Standard
Rodent Screen	None
Service Factor	1.15
Shaft Diameter	0.875 IN
Shaft Ground Indicator	No Shaft Grounding
Shaft Rotation	Reversible
Shaft Slinger Indicator	No Slinger
Speed	1740 rpm
Speed Code	Single Speed
Starting Method	Direct on line
Thermal Device - Bearing	None
Thermal Device - Winding	None
Vibration Sensor Indicator	No Vibration Sensor
Winding Thermal 1	None
Winding Thermal 2	None

Nameplate

NP1256L									
CAT.NO.	L3516T								
SPEC.	35EE001G243								
HP	2								
VOLTS	115/230								
AMP	15.8/7.9								
RPM	1740								
FRAME	145T	**HZ**	60			**PH**	1		
SER.F.	1.15	**CODE**	J	**DES**	L	**CLASS**	F		
NEMA-NOM-EFF	80	**PF**	90						
RATING	40C AMB-CONT								
CC									
DE	6205	**ODE**	6203						
ENCL	TEFC	**SN**							

Accessories

Part number	Description	Multiplier
35-8762	C FACE KIT	A8

AC Induction Motor Performance Data
Record # 102617
Typical performance - not guaranteed values

Winding: 35WGG243-R001	**Type:** 3546LC	**Enclosure:** TEFC

Nameplate Data			**230 V, 60 Hz: High Voltage Connection**	
Rated Output (HP)		2	**Full Load Torque**	6.107 LB-FT
Volts		115/230	**Start Configuration**	direct on line
Full Load Amps		15.8/7.9	**Breakdown Torque**	15.9 LB-FT
R.P.M.		1740	**Pull-up Torque**	8.59 LB-FT
Hz	60 **Phase**	1	**Locked-rotor Torque**	14.2 LB-FT
NEMA Design Code	L **KVA Code**	J	**Starting Current**	66.3 A
Service Factor (S.F.)		1.15	**No-load Current**	1.66 A
NEMA Nom. Eff.	80 **Power Factor**	90	**Line-line Res. @ 25ºC**	1.5479 Ω A Ph 1.0959 Ω B Ph
Rating - Duty		40C AMB-CONT	**Temp. Rise @ Rated Load**	67°C
S.F. Amps			**Temp. Rise @ S.F. Load**	75°C

Load Characteristics 230 V, 60 Hz, 2 HP

% of Rated Load	**25**	**50**	**75**	**100**	**125**	**150**	**S.F.**
Power Factor	92	98	99	99	99	99	99
Efficiency	62.5	78.2	82.8	83.4	81.6	77.9	82.3
Speed	1784.7	1771.4	1756.5	1738.4	1717	1691.1	1726
Line amperes	2.97	4.36	6.02	7.92	10.1	12.6	9.23

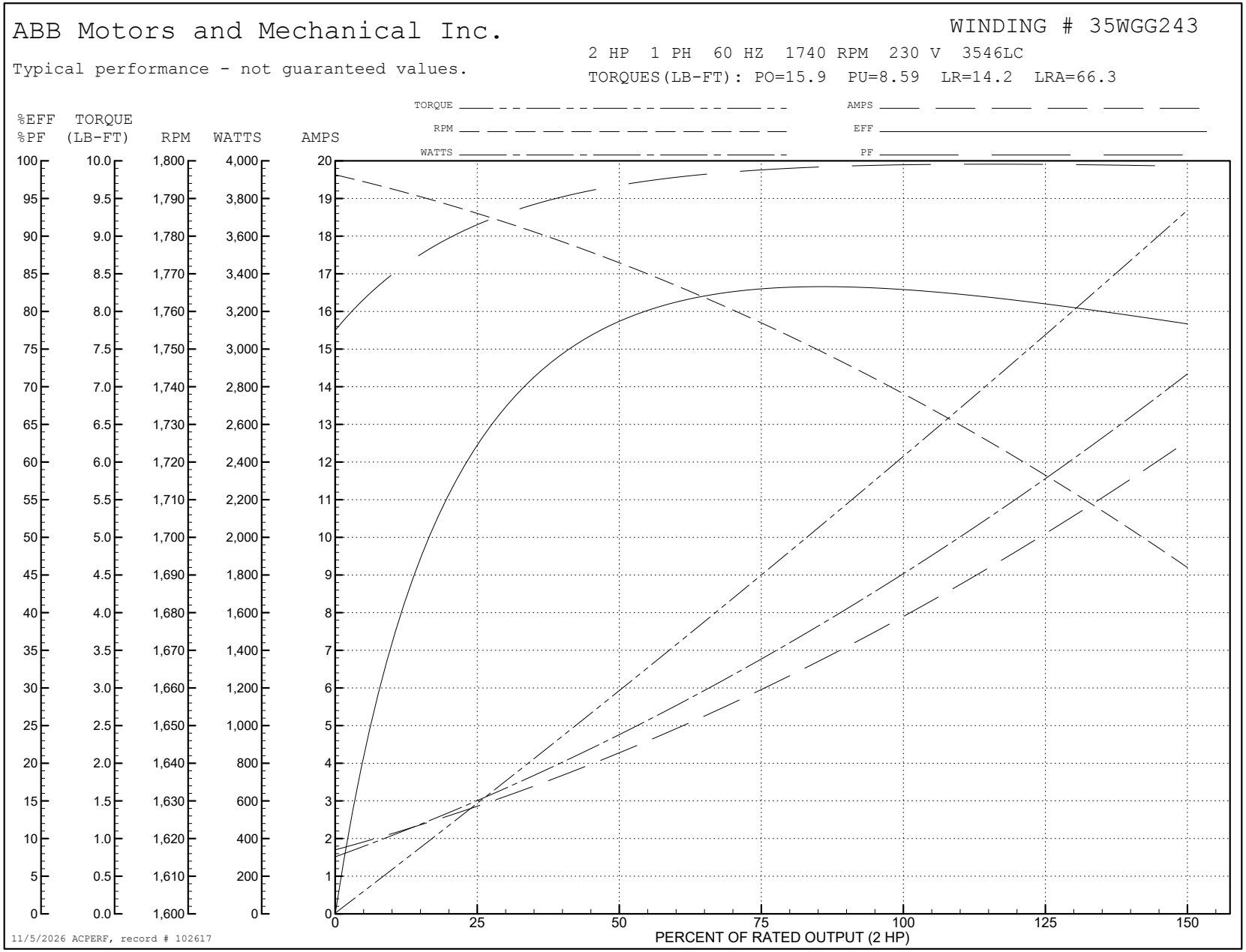
ABB Motors and Mechanical Inc.
WINDING # 35WGG243
Typical performance - not guaranteed values.
2 HP 1 PH 60 HZ 1740 RPM 230 V 3546LC
TORQUES(LB-FT): PO=15.9 PU=8.59 LR=14.2 LRA=66.3
TORQUE
RPM
WATTS
AMPS
EFF
PF
%EFF %PF
TORQUE (LB-FT)
RPM
WATTS
AMPS
PERCENT OF RATED OUTPUT (2 HP)
11/5/2026 ACPERF, record # 102617

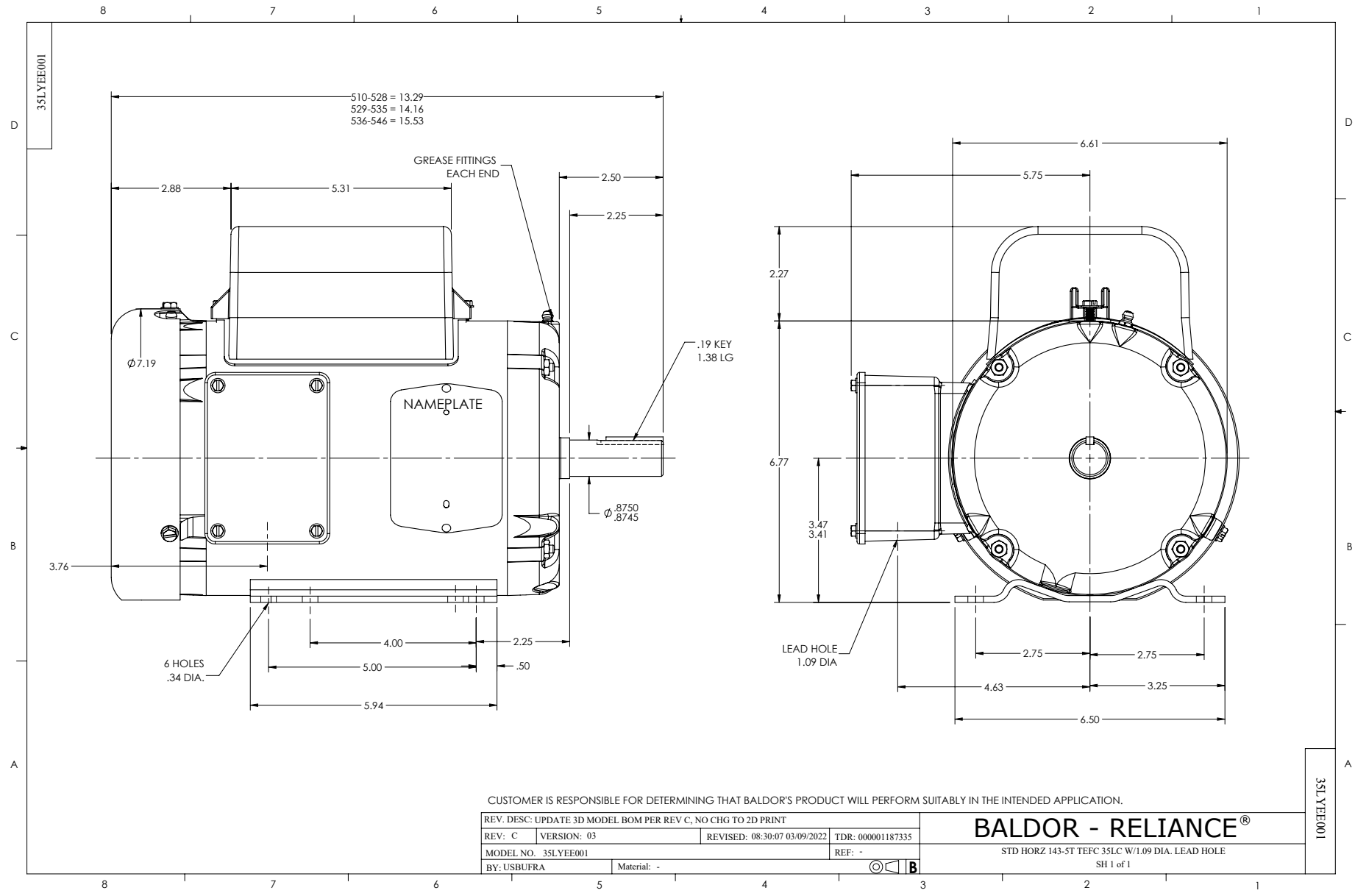
35LYEE001
510-528 = 13.29
529-535 = 14.16
536-546 = 15.53
GREASE FITTINGS
EACH END
2.88
5.31
2.50
2.25
.19 KEY
1.38 LG
Ø7.19
NAMEPLATE
Ø .8750
Ø .8745
3.76
4.00
2.25
6 HOLES
.34 DIA.
5.00
.50
5.94
6.61
5.75
2.27
6.77
3.47
3.41
LEAD HOLE
1.09 DIA
2.75
2.75
4.63
3.25
6.50
CUSTOMER IS RESPONSIBLE FOR DETERMINING THAT BALDOR'S PRODUCT WILL PERFORM SUITABLY IN THE INTENDED APPLICATION.
REV. DESC: UPDATE 3D MODEL BOM PER REV C, NO CHG TO 2D PRINT
REV: C
VERSION: 03
REVISED: 08:30:07 03/09/2022
TDR: 000001187335
MODEL NO. 35LYEE001
REF: -
BY: USBUFRA
Material: -
B
BALDOR - RELIANCE®
STD HORZ 143-5T TEFC 35LC W/1.09 DIA. LEAD HOLE
SH 1 of 1
35LYEE001

CD0016A01

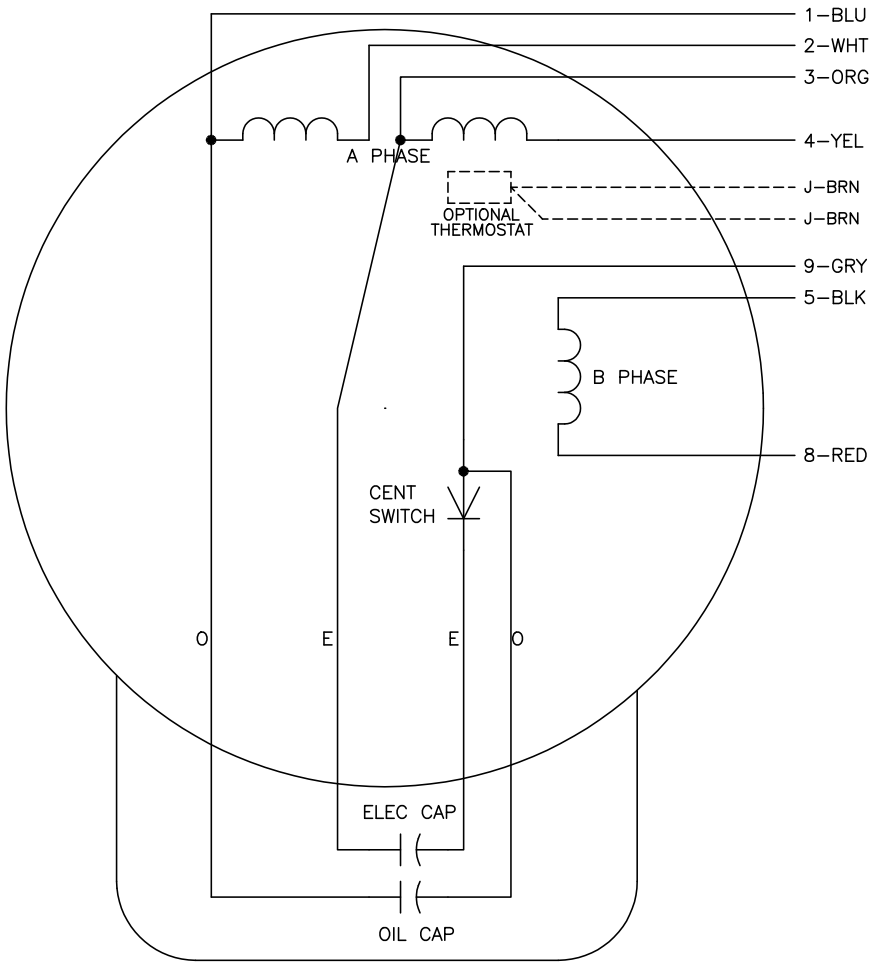

	LINE A	LINE B	JOIN	JOIN
HIGH STD	1	4,5	2,3	8,9
HIGH OPP	1	4,8	2,3	5,9
LOW STD	1,3	2,4,5	8,9	–
LOW OPP	1,3	2,4,8	5,9	–

NOTES:

1. STANDARD ROTATION IS CCW FACING END OPPOSITE SHAFT EXTENSION.
2. OPTIONAL THERMOSTAT IS PROVIDED WHEN SPECIFIED.
3. MULTIPLE CAPACITORS ARE CONNECTED IN PARALLEL UNLESS OTHERWISE SPECIFIED.
4. LEAD COLORS ARE OPTIONAL. LEADS MUST ALWAYS BE NUMBERED AS SHOWN.

CD0016A01

REV. DESC: REVISE TO SHOW OPTIONAL COLORS			BALDOR ELECTRIC Co.
REV. LTR: E	BY: JLP	REVISED: 04/09/99 1:19	TDR: 0178636
CD0016A01		FILE: AAA00007410	MDL: –
		MTL: –	TYPE LC, DV, REV, OIL CAP ACR. LINE, 7 LEADS