QSFP-100G-PSM4-AR-AO

Arista Networks® QSFP-100G-PSM4 Compatible TAA 100GBase-PSM4 QSFP28 Transceiver (SMF, 1310nm, 500m, MPO, DOM)

Features

- SFF-8665 Compliance
- MPO Connector
- Commercial Temperature 0 to 70 Celsius
- Single-mode Fiber
- Hot Pluggable
- Excellent ESD Protection
- Metal with Lower EMI
- RoHS Compliant and Lead Free

Applications

- 100GBase Ethernet
- Access and Enterprise

Product Description

This Arista Networks® QSFP-100G-PSM4 compatible QSFP28 transceiver provides 100GBase-PSM4 throughput up to 500m over single-mode fiber (SMF) using a wavelength of 1310nm via an MPO connector. It is guaranteed to be 100% compatible with the equivalent Arista Networks® transceiver. This easy to install, hot swappable transceiver has been programmed, uniquely serialized and data-traffic and application tested to ensure that it will initialize and perform identically. Digital optical monitoring (DOM) support is also present to allow access to real-time operating parameters. This transceiver is Trade Agreements Act (TAA) compliant. We stand behind the quality of our products and proudly offer a limited lifetime warranty.

AddOn's transceivers are RoHS compliant and lead-free.

TAA refers to the Trade Agreements Act (19 U.S.C. & 2501-2581), which is intended to foster fair and open international trade. TAA requires that the U.S. Government may acquire only "U.S. – made or designated country end products."

Rev. 040523

Absolute Maximum Ratings

Parameter	Symbol	Min.	Typ	Max.	Unit
Maximum Supply Voltage	Vcc	-0.5		4.0	V
Storage Temperature	TS	-40		+85	°C
Operating Case Temperature	Tc	-5	25	70	°C
Relative Humidity	RH	5		95	%
Data Rate PER Channel			25.78125		Gb/s

Electrical Characteristics

Parameter	Symbol	Min.	Typ.	Max.	Unit	Notes
Power Supply Voltage	Vcc	3.135	3.3	3.465	V	
Power Dissipation	PD			3500	mW	
Module Supply Current	Icc			1100	mA	
Transmitter						
Differential Data Input Swing	$V_{IN, P-P}$	190		700	mV_{p-p}	
Input Differential Impedance	Zin	90	100	110	Ω	
AC Common Mode Input Voltage Tolerance		15			mV	
Receiver						
Output Differential Impedance	Zo	90	100	110	Ω	
Differential Data Output Swing	$V_{OUT, P-P}$	300		850	mV_{P-P}	
AC Common Mode Output Voltage				7.5	mV	
Single-ended Output Voltage		-0.3		4	V	

Notes:

1. Internally AC Coupled, but requires an external 100Ω differential load termination.

Optical Characteristics

Parameter	Symbol	Min.	Typ.	Max.	Unit	Notes
Transmitter						
Launch Optical Power per lane	Po	-9		+2	dBm	1
Side Mode Suppression Ratio	SMSR	30			dB	
Center Wavelength Range	Λ	1295	1310	1325	nm	
Extinction Ratio	EX	3.5			dB	2
Optical Return Loss Tolerance	ORLT			12	dB	
Pout @TX-Disable Asserted	Poff			-30	dBm	1
Transmitter Eye Mask Definition {X1, X2, X3, Y1, Y2, Y3}		{0.31, 0.4, 0.45, 0.34, 0.38, 0.4}				
Receiver						
Center Wavelength	λc	1295		1325	Nm	
Receiver Sensitivity	S			-12.0	dBm	3
Damage Threshold	POL	3.0			dBm	
LOS Assert	LOSA	-24			dBm	
LOS De-Assert	LOSD			-12.5	dBm	
LOS Hysteresis		0.5			dB	

Notes:

1. The optical power is launched into SMF.
2. Measured with a PRBS 2^{31}-1 test pattern @25.78125Gbps
3. Measured with a PRBS 2^{31}-1 test pattern, 25.78125Gb/s, BER of 5×10^{-5} (informative)

Pin Descriptions

Pin	Symbol	Name/Descriptions	Ref.
1	GND	Transmitter Ground (Common with Receiver Ground)	1
2	Tx2-	Transmitter Inverted Data Input	
3	Tx2+	Transmitter Non-Inverted Data output	
4	GND	Transmitter Ground (Common with Receiver Ground)	1
5	Tx4-	Transmitter Inverted Data Input	
6	Tx4+	Transmitter Non-Inverted Data output	
7	GND	Transmitter Ground (Common with Receiver Ground)	1
8	ModSelL	Module Select	2
9	ResetL	Module Reset	2
10	VccRx	3.3V Power Supply Receiver	
11	SCL	2-Wire serial Interface Clock	2
12	SDA	2-Wire serial Interface Data	2
13	GND	Transmitter Ground (Common with Receiver Ground)	1
14	Rx3+	Receiver Non-Inverted Data Output	
15	Rx3-	Receiver Inverted Data Output	
16	GND	Transmitter Ground (Common with Receiver Ground)	1
17	Rx1+	Receiver Non-Inverted Data Output	
18	Rx1-	Receiver Inverted Data Output	
19	GND	Transmitter Ground (Common with Receiver Ground)	1
20	GND	Transmitter Ground (Common with Receiver Ground)	1
21	Rx2-	Receiver Inverted Data Output	
22	Rx2+	Receiver Non-Inverted Data Output	
23	GND	Transmitter Ground (Common with Receiver Ground)	1
24	Rx4-	Receiver Inverted Data Output	1
25	Rx4+	Receiver Non-Inverted Data Output	
26	GND	Transmitter Ground (Common with Receiver Ground)	1
27	ModPrsl	Module Present	
28	IntL	Interrupt	2
29	VccTx	3.3V power supply transmitter	
30	Vcc1	3.3V power supply	
31	LPMode	Low Power Mode	2
32	GND	Transmitter Ground (Common with Receiver Ground)	1
33	Tx3+	Transmitter Non-Inverted Data Input	
34	Tx3-	Transmitter Inverted Data Output	
35	GND	Transmitter Ground (Common with Receiver Ground)	1
36	Tx1+	Transmitter Non-Inverted Data Input	
37	Tx1-	Transmitter Inverted Data Output	
38	GND	Transmitter Ground (Common with Receiver Ground)	1

Notes:

1. The module signal grounds are isolated from the module case.
2. This is an open collector/drain output that on the host board requires a 4.7KΩ to 10KΩ pull-up resistor to VccHost.

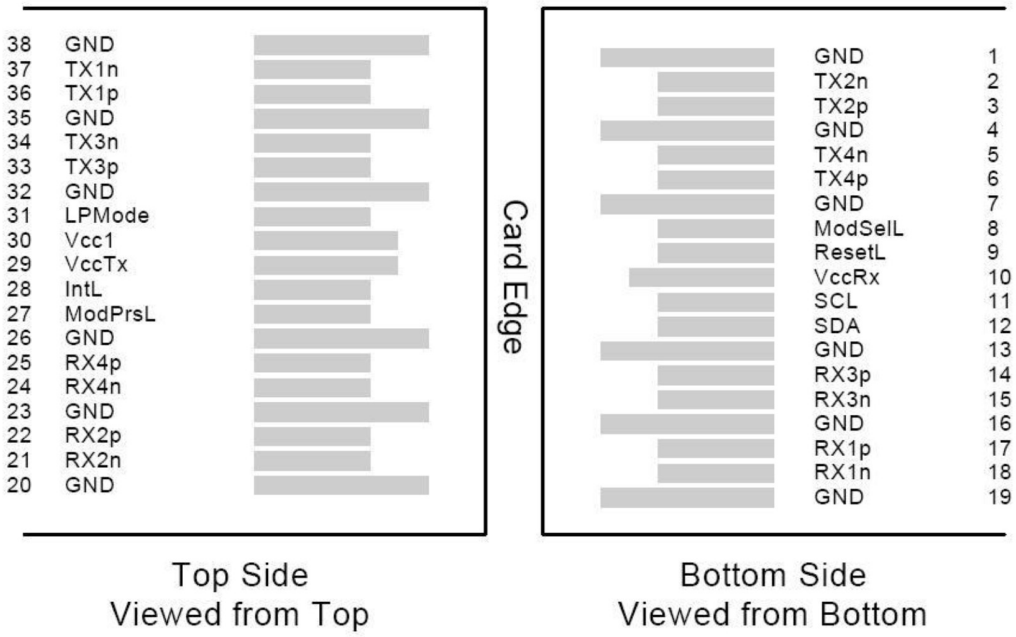

Recommended Host Board Power Supply Filter Network

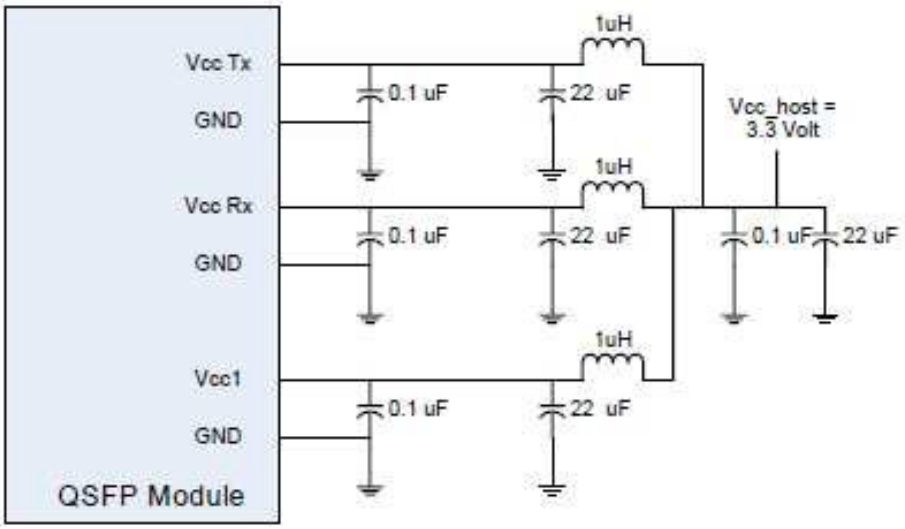

Recommended Application Interface Block Diagram

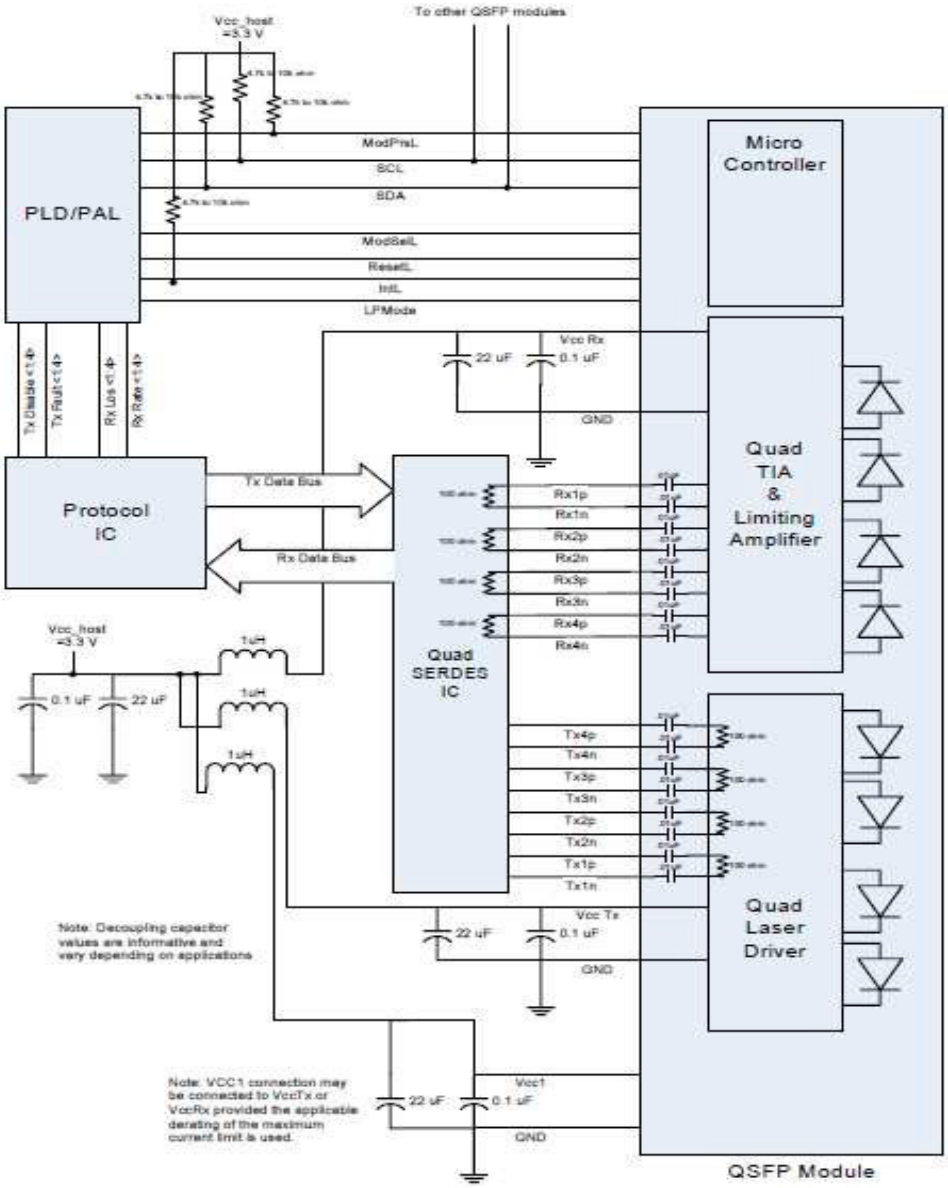

Mechanical Specifications

Measurement unit: mm

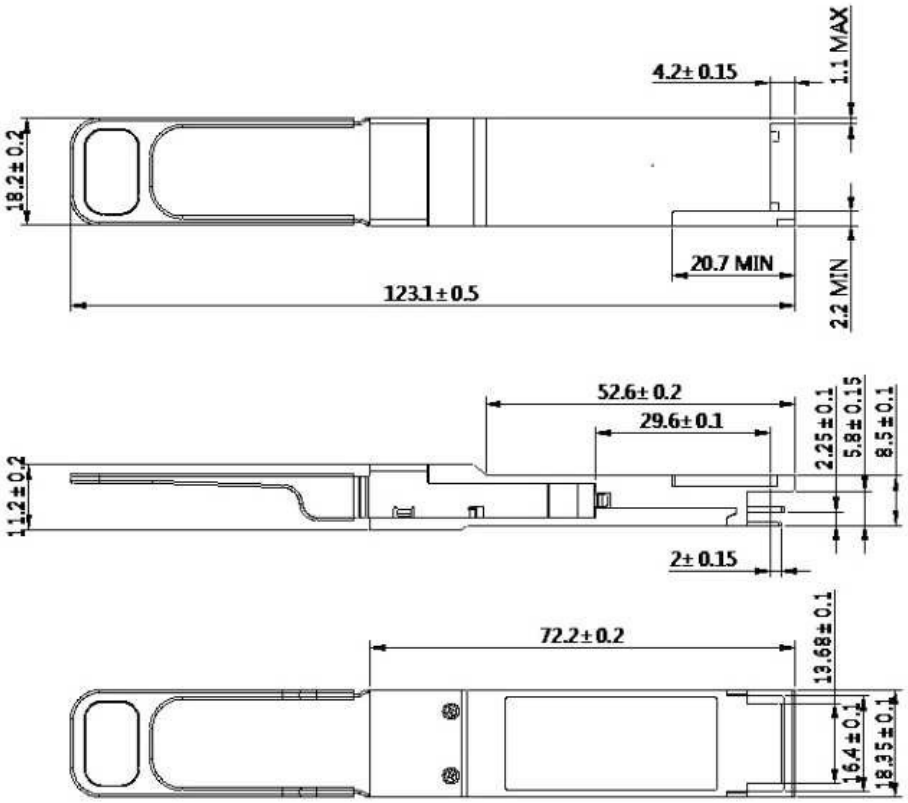

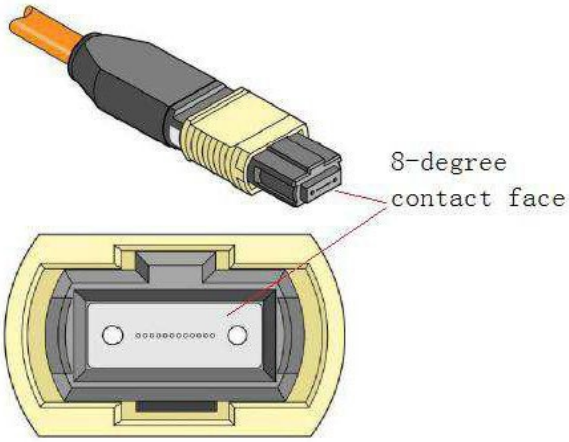

About AddOn Networks

In 1999, AddOn Networks entered the market with a single product. Our founders fulfilled a severe shortage for compatible, cost-effective optical transceivers that compete at the same performance levels as leading OEM manufacturers. Adhering to the idea of redefining service and product quality not previously had in the fiber optic networking industry, AddOn invested resources in solution design, production, fulfillment, and global support.

Combining one of the most extensive and stringent testing processes in the industry, an exceptional free tech support center, and a consistent roll-out of innovative technologies, AddOn has continually set industry standards of quality and reliability throughout its history.

Reliability is the cornerstone of any optical fiber network and is in engrained in AddOn's DNA. It has played a key role in nurturing the long-term relationships developed over the years with customers. AddOn remains committed to exceeding industry standards with certifications from ranging from NEBS Level 3 to ISO 9001:2005 with every new development while maintaining the signature reliability of its products.

U.S. Headquarters

Email: sales@addonnetworks.com

Telephone: +1 877.292.1701

Fax: 949.266.9273

Europe Headquarters

Email: salessupportemea@addonnetworks.com

Telephone: +44 1285 842070