marathon®

General Purpose Motors

Model No: 256TTFCD6003
Catalog No: GT1224A

General Purpose Motor, 20 & 15 HP, 3 Ph, 60 & 50 Hz, 230/460 & 190/380 V, 3600 RPM, 256TC Frame, TEFC

©2026 Marathon, All Rights Reserved.

marathon®

Product Information Packet: Model No: 256TTFCD6003, Catalog No: GT1224A General Purpose Motor, 20 & 15 HP, 3 Ph, 60 & 50 Hz, 230/460 & 190/380 V, 3600 RPM, 256TC Frame, TEFC

Nameplate Specifications

Phase	**3**	Output HP	**20 & 15 Hp**
Output KW	**14.9 & 11.2 kW**	Voltage	**230/460 & 190/380 V**
Speed	**3540 & 2945 r/min**	Synchronous RPM	**3600 & 3000 r/min**
Service Factor	**1.15 & 1.15**	Frame	**256TC**
Enclosure	**Totally Enclosed Fan Cooled**	Thermal Protection	**No Protection**
Efficiency	**91 & 90.2 %**	Ambient Temperature	**40 °C**
Frequency	**60 & 50 Hz**	Current	**47/23.5 & 43.5/21.7 A**
Power Factor	**88**	Duty	**Continuous**
Insulation Class	**F**	Design Code	**B**
KVA Code	**G**	Drive End Bearing Size	**6309**
Opp Drive End Bearing Size	**6209**	UL	**Listed**
CSA	**Y**	CE	**Y**
IP Code	**55**	Number of Speeds	**1**
Hazardous Location	**DIVISION 2 T2B**		

Technical Specifications

Electrical Type	**Squirrel Cage Inverter Rated**	Starting Method	**Line Or Inverter**
Poles	**2**	Rotation	**Reversible**
Resistance Main	**.561 O**	Mounting	**Rigid Base**
Motor Orientation	**Horizontal**	Drive End Bearing	**Ball**
Opp Drive End Bearing	**Ball**	Frame Material	**Cast Iron**
Shaft Type	**T**	Overall Length	**26.39 in**
Frame Length	**11.73 in**	Shaft Diameter	**1.626 in**
Shaft Extension	**4 in**	Assembly/Box Mounting	**F1/F2 Capable**
Inverter Load	**Constant 2:1/Variable 10:1**		

Drawings

Connection Drawing	**EE7308K**	Outline Drawing	**SS620700-200**

This is an uncontrolled document once printed or downloaded and is subject to change without notice. Date Created: 16/10/2026

DASH NO.	B	C	E	2E	2F	2FF	AG	AH	BA	BV	MOUNTING	FRAME
100	9.60	24.65	5.00	10.00	---	8.25	20.90	3.75	4.75	9.14	F1 OR F2	254TC
200	11.34	26.39			8.25	10.00	22.64			10.00		254/256TC

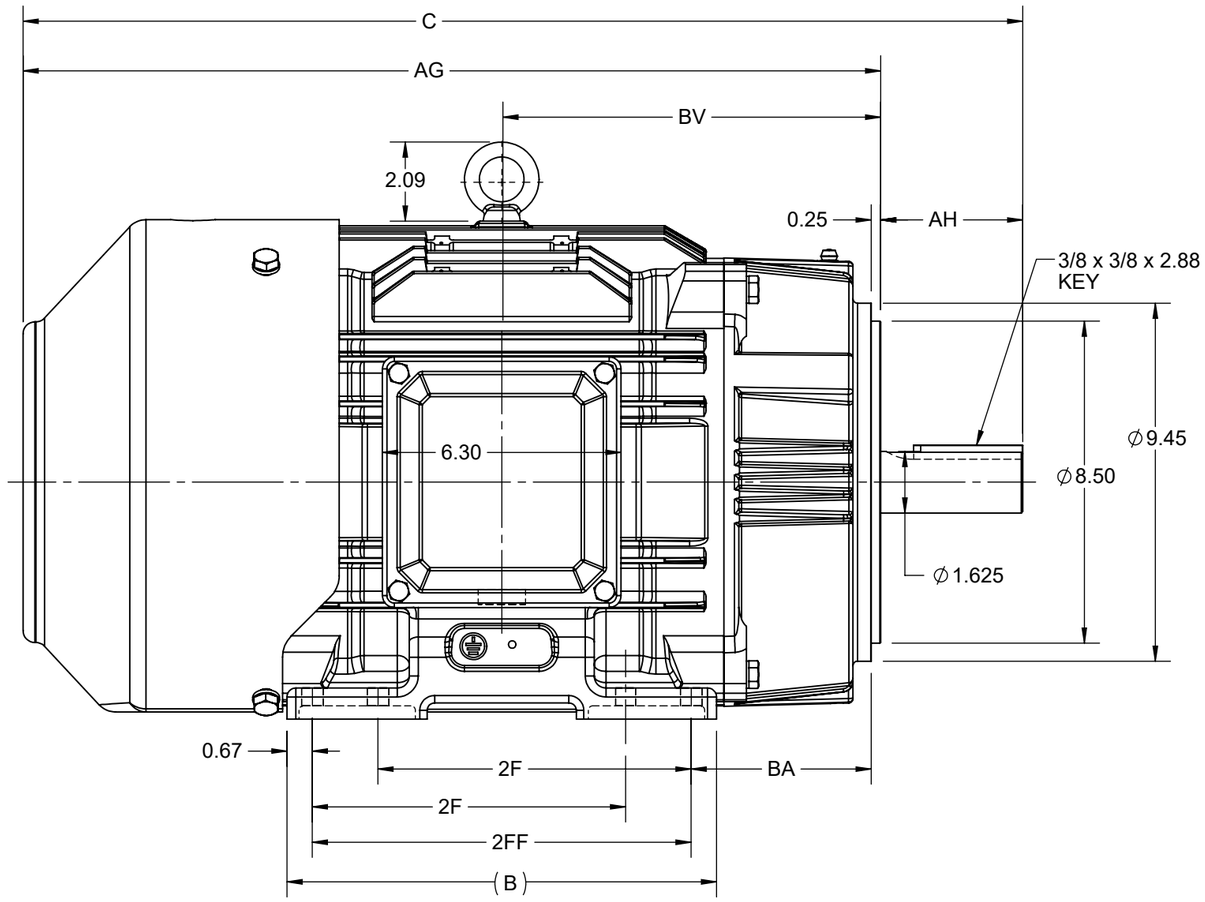

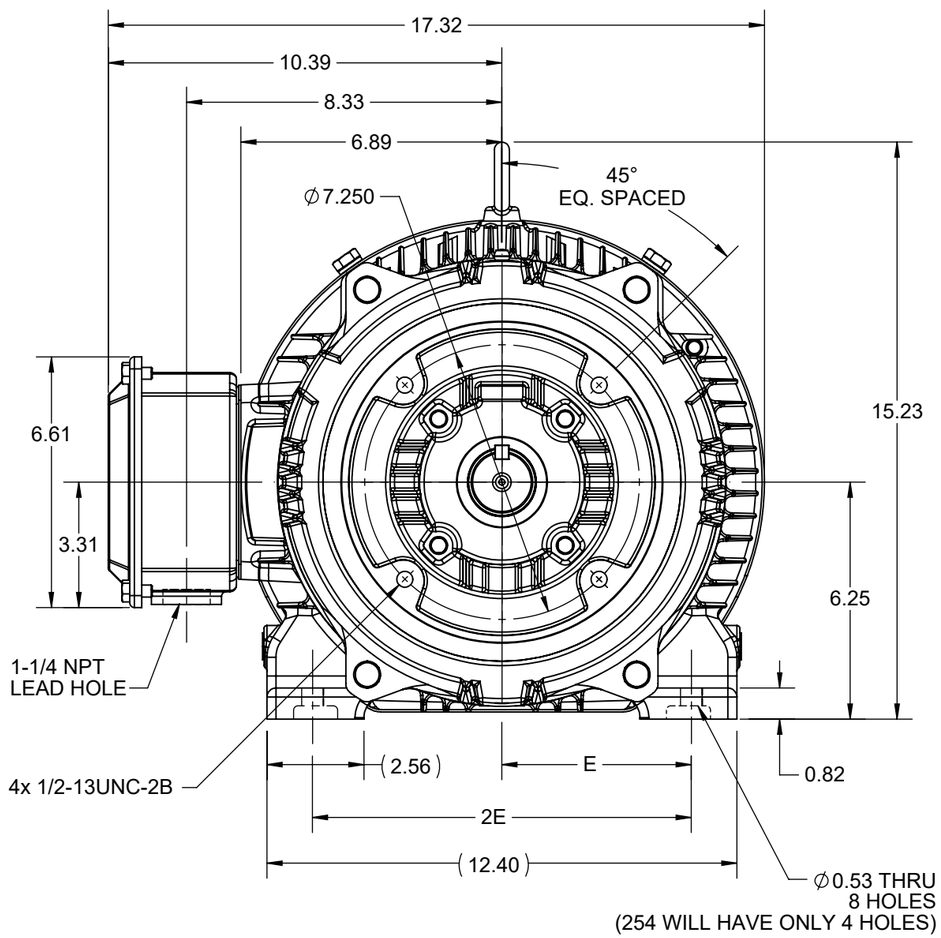

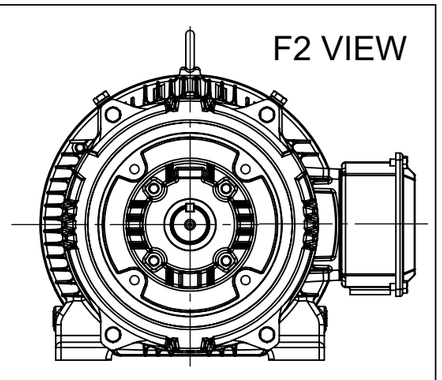

DRAWING REVISION	REVISION BY	REV DATE/© DATE
D	SB	07/23/2025
REQUEST NUMBER	APPROVED BY	DATE
CR-0023556	SBD	07/23/2025

REQUEST NUMBER DESCRIPTION
DRAWING TITLE BLOCK UPDATED

COPYRIGHT (PER REVISION DATE) MARATHON ELECTRIC, LLC. ALL RIGHTS RESERVED. PROPRIETARY AND CONFIDENTIAL INFORMATION - THIS DOCUMENT IS THE PROPERTY OF MARATHON ELECTRIC, LLC. ("OWNER") AND CONTAINS OWNER'S PROPRIETARY INFORMATION. ANY PERSON, CORPORATION OR OTHER FIRM RECEIVING IT IS DEEMED, BY RECEIVING IT, TO AGREE THAT IT, AND/OR ANY PART OF IT, SHALL NOT BE DISCLOSED TO ANY PERSON, CORPORATION OR OTHER ENTITY, DUPLICATED, AND/OR USED, EXCEPT AS EXPRESSLY APPROVED IN WRITING IN ADVANCE BY OWNER. THIS DOCUMENT SHALL BE RETURNED TO OWNER UPON REQUEST. IT MAY BE SUBJECT TO CERTAIN RESTRICTIONS UNDER APPLICABLE EXPORT CONTROL LAWS AND REGULATIONS.

PRIMARY DIMENSIONS ARE INCH
mm DIMENSIONS IN [BRACKETS]
ARE FOR REFERENCE ONLY

DRAWN BY	DESCRIPTION
SMAR	OUTLINE
DATE	254/256TC FR-TEFC-CAST IRON
06/07/2015	
APPROVED BY	
SBD	
DATE	
06/07/2015	
REFERENCE	MATERIAL / PROCESS/FINISH
THIRD ANGLE PROJECTION	SIZE B / DRAWING NUMBER SS620700 / SHEET 1 OF 1

marathon™

Uncontrolled Copy

LOW VOLTAGE

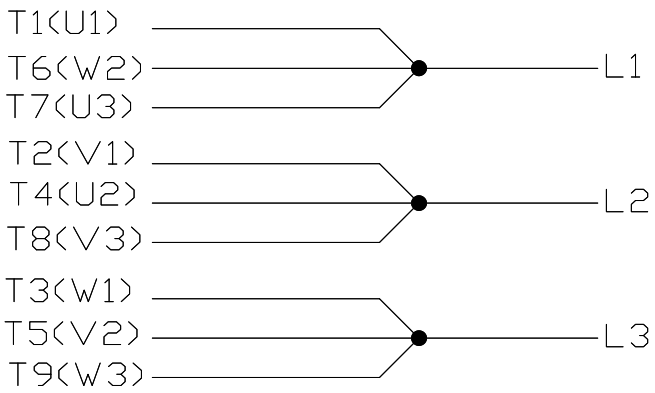

HIGH VOLTAGE

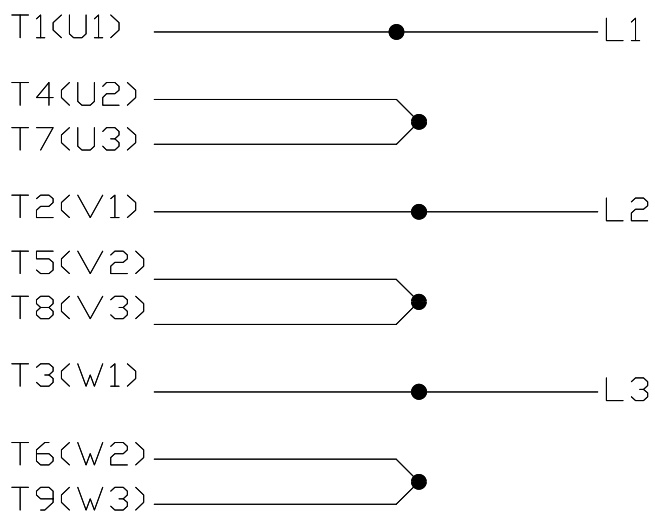

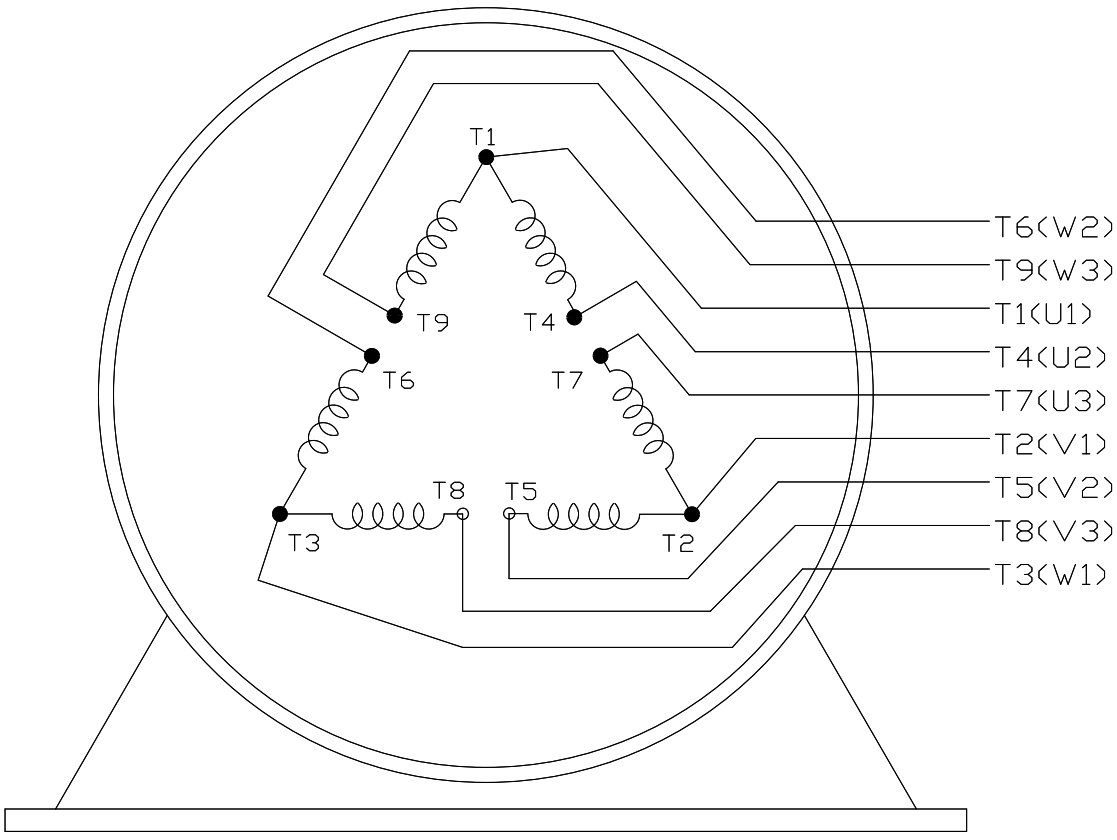

VIEW OF TERMINAL END

DRAWING REVISION: F	REVISION BY: SB	REV DATE/ © DATE: 08/01/2025	DRAWN BY: PGK	marathon™
REQUEST NUMBER: CR-0023654	APPROVED BY: SBD	DATE: 08/01/2025	DATE: 06/04/1997	
REQUEST NUMBER DESCRIPTION: DRAWING TITLE BLOCK UPDATED			APPROVED BY: GK	DESCRIPTION: CONN DIAGRAM-EXTERNAL DELTA CON. - 3ø - 9 LEADS
			DATE: 06/15/1997	
			REFERENCE	MATERIAL / PROCESS/FINISH
			THIRD ANGLE PROJECTION	SIZE: A / DRAWING NUMBER: EE7308K / SHEET: 1 OF 1

COPYRIGHT (PER REVISION DATE) MARATHON ELECTRIC, LLC. ALL RIGHTS RESERVED.
PROPRIETARY AND CONFIDENTIAL INFORMATION - THIS DOCUMENT IS THE PROPERTY OF MARATHON ELECTRIC, LLC. ("OWNER") AND CONTAINS OWNER'S PROPRIETARY INFORMATION. ANY PERSON, CORPORATION OR OTHER FIRM RECEIVING IT IS DEEMED, BY RECEIVING IT, TO AGREE THAT IT, AND/OR ANY PART OF IT, SHALL NOT BE DISCLOSED TO ANY PERSON, CORPORATION OR OTHER ENTITY, DUPLICATED, AND/OR USED, EXCEPT AS EXPRESSLY APPROVED IN WRITING IN ADVANCE BY OWNER. THIS DOCUMENT SHALL BE RETURNED TO OWNER UPON REQUEST. IT MAY BE SUBJECT TO CERTAIN RESTRICTIONS UNDER APPLICABLE EXPORT CONTROL LAWS AND REGULATIONS.

PRIMARY DIMENSIONS ARE INCH
mm DIMENSIONS IN [BRACKETS]
ARE FOR REFERENCE ONLY

Data Sheet

Date: 5/3/2018
Customer:
Attention:
Submitted by: FAREEDA DUDEKULA

marathon® electric

256TTFCD6003

Submittal

Data @ 460 V

Motor Load Data

Load	0%	25%	50%	75%	100%	115%	125%	LR	
Current (Amps)	8.1	10.0	13.6	18.3	23.7	27.1	29.5	143	
Torque (ft-lb)	0.00	7.3	14.7	22.0	29.7	34.0	37.0	49.0	
RPM	3600	3585	3570	3555	3540	3,530	3522	0	
Efficiency (%)		84.5	89.5	91.0	91.0	90.6	89.9		
P.F. (%)	9.0	56.0	76.5	84.0	87.5	88.5	88.5	38.0	

Motor Speed Data

	LR	Pull-Up	BD	Rated	Idle
Speed (RPM)	0	1800	3258	3540	3600
Current (Amps)	143	128	83.0	23.7	8.1
Torque (ft-lb)	49.0	41.0	74.0	29.7	0.00

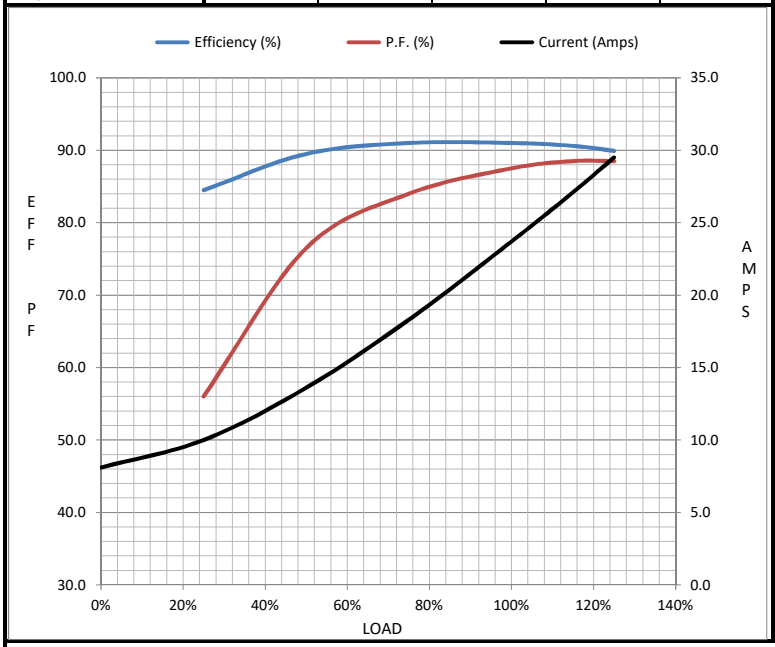

Information Block

HP	20.0
Sync. RPM	3600
Frame	256182TTFC6080
Enclosure	TEFC
Construction	TFC
Voltage	230/460#190/380 V
Frequency	60 Hz
Design	B
LR Code letter	G
Service Factor	1.15
Temp Rise @ FL	60 ° C
Duty	CONT
Ambient	40 ° C
Elevation	1,000 feet
Rotor/Shaft wk²	1.35 Lb-Ft²
Ref Wdg	HE31602007 NONE
Sound Pressure @ 1M	72 dBA
VFD Rating	CONSTANT 10:1
Outline Dwg	B-SS620700
Conn. Diag	A-EE7308K
Additional Specifications:	
0	
0	

EQUIV CKT (OHMS / PHASE)

R1	R2	X1	X2	Xm
0.3620	0.1920	1.1220	0.9370	33.9380

Speed -Torque Curve

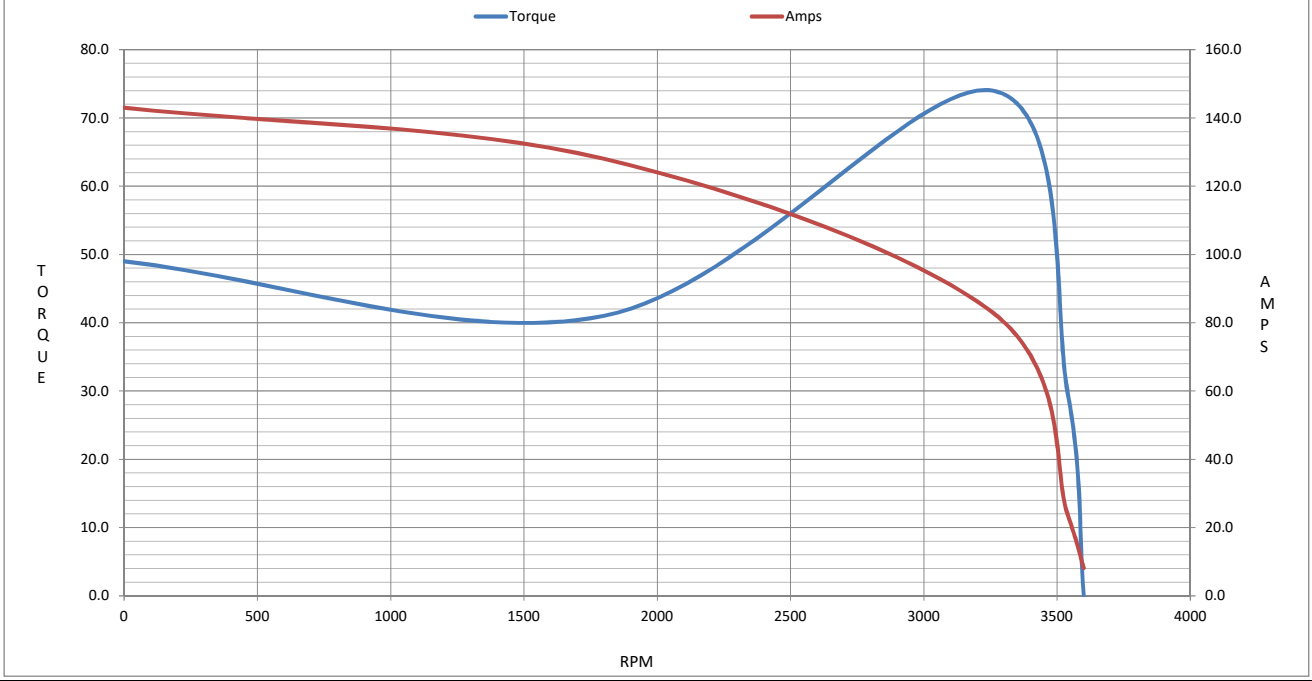

Uncontrolled Copy

P.O. BOX 8003
WAUSAU, WI 54401-8003
PH. 715-675-3311

DATA VOLTS: 460

CERTIFICATION DATA SHEET

CUSTOMER:
ORDER #:
CONN. DIAGRAM: A-EE7308K
OUTLINE: B-SS620700
WINDING: HE31602007 NONE 2
SPEED:

CUSTOMER P.O. #:
REFERENCE MODEL #: 256TTFCD6003
CAT #: GT1224A
CUSTOMER PART #:
MOUNTING: F1/F2 CAPABLE

TYPICAL MOTOR PERFORMANCE DATA

HP	KW	SYNC RPM	FL RPM	FRAME	ENCLOSURE	TYPE	KVA CODE	DESIGN
20	14.9	3600	3540	256TC	TEFC	TFC	G	B

PH	HZ	VOLTS	AMPS	START TYPE	DUTY	INSL	S.F.	AMB	ELEV.
3	60/50	230/460#190/380	47.5/23.7&43.5/21.7	LINE OR INVERTER	CONT	F	1.15	40	3300

F.L. EFF	91.0	3/4 LD EFF	91.0	1/2 LD EFF	89.5	GTD EFF	ELECT. TYPE
F.L. PF	87.5	3/4 LD PF	84.0	1/2 LD PF	76.5	90.2	SQ CAGE INV RATED

F.L. TORQUE	LR AMPS @ 460 V	L.R. TORQUE	B.D. TORQUE	F.L. RISE (°C)	
29.7 LB-FT	143	49.0 LB-FT 165%	74.0 LB-FT 249%	60	

@ 3 FT.	POWER	ROTOR WK²	MAX. LOAD WK²	SAFE STALL TIME	STARTS/HOUR	MOTOR WGT
72 dBA	81 dBA	1.35 LB-FT²	0 LB-FT²	20 SEC.	2	435 LB.

*** SUPPLEMENTAL INFORMATION ***

DE BRACKET TYPE	ODE BRACKET TYPE	MOUNT TYPE	MOTOR ORIENTATION	SEVERE DUTY	HAZARDOUS LOCATION	DRIP COVER	SCREENS	PAINT
C-FACE	STANDARD	RIGID	HORIZONTAL	NO	NONE	NO	NONE	BLUE (ENAMEL)

BEARINGS DE	BEARINGS ODE	GREASE	SHAFT TYPE	SPECIAL DE	SPECIAL ODE	SHAFT MATERIAL	FRAME MATERIAL
BALL 6209	BALL 6209	POLYREX EM	T	NONE	NONE	1045 HOT ROLLED (C-204)	CAST IRON

THERMOSTATS	PROTECTORS	WDG RTD's	BRG RTD's	THERMISTORS	CONTROL	SPACE HEATERS
NONE	NOT	NONE	NONE	NONE	FALSE	NA

R1 (ohms/ph)	R2 (ohms/ph)	X1 (ohms/ph)	X2 (ohms/ph)	Xm (ohms/ph)	VIBRATION (in/sec)	FLOAT
0.362	0.192	1.122	0.937	33.938	0.150	ODE

*
NOTES
*

INVERTER TORQUE: CONSTANT 10:1
INV. HP SPEED RANGE: NONE

ENCODER: NONE
NONE
NONE NONE PPR

BRAKE: NONE
NONE NONE
FT-LB: NA
VOLTAGE: NONE HZ:

UL: V-INS, CONST UL REC

PREPARED BY: FAREEDA DUDEKULA
DATE: 5/3/2018

FORM: 3531 REV_4 2/27/06