KINGSTON

TO ORDER PARTS, CALL: 1-877-252-7277
www.kingstonbrass.com

VCT7DS6731NL0,1,2,5,7,8,W

67" Cast Iron Clawfoot Tub with 7" Faucet Drillings

M10 x 20 (4 pcs)

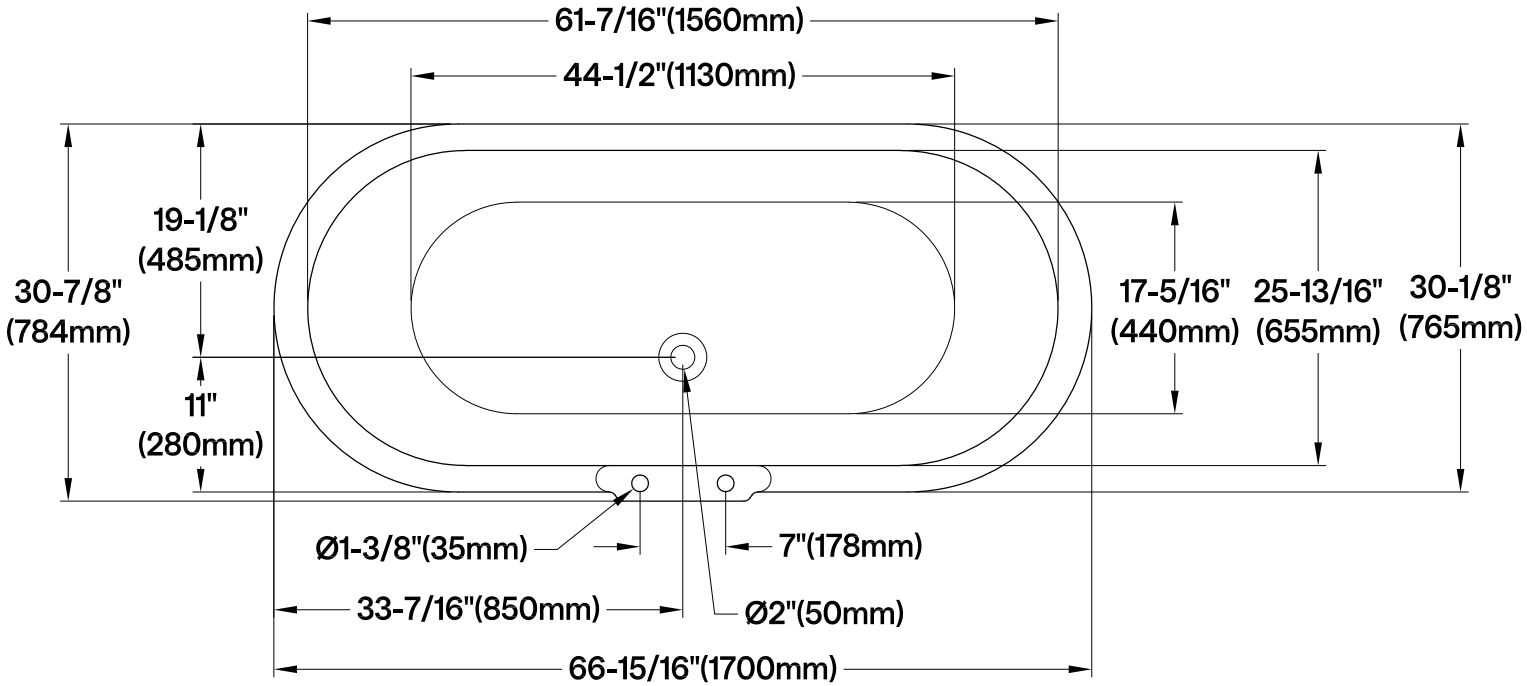

Drain Hole Size
(Scale 3:1)

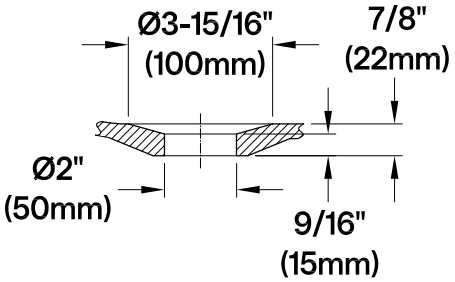

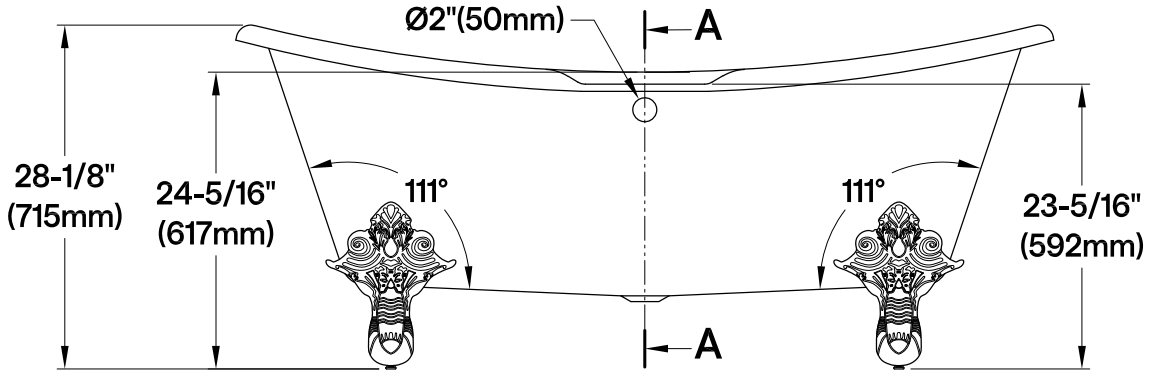

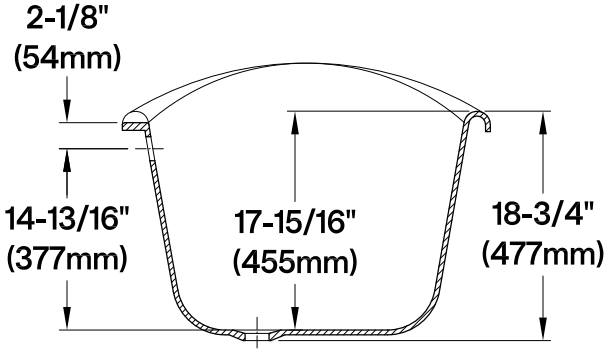

Section A-A

2026-02-C