Convertible Upright Freezer / Refrigerator

Model - FR 430 SC

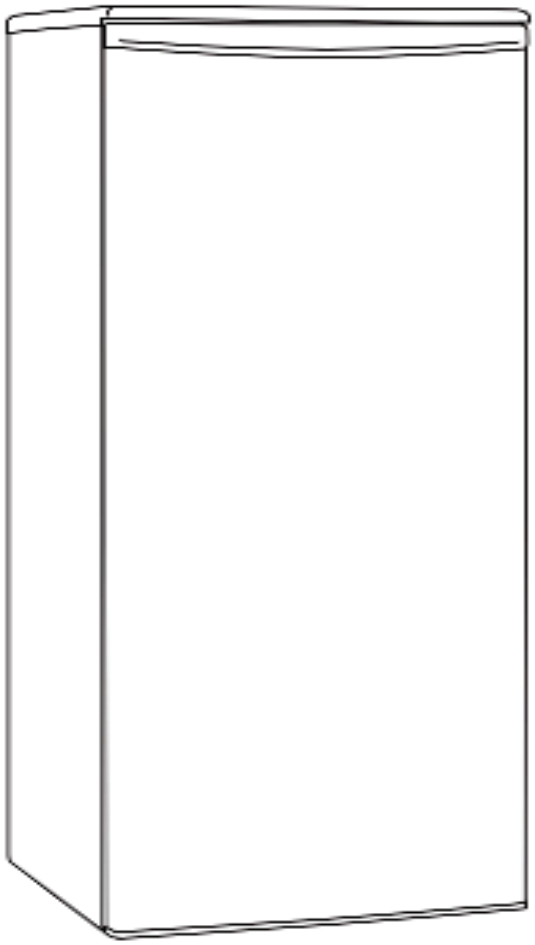

OWNER'S MANUAL

STOP	DO NOT RETURN TO STORE!	CALL NOW	1-800-776-3538
	HAVE QUESTIONS OR NEED SERVICE?	Service	Service@ApplianceDesk.com

Read the instructions carefully and keep for future reference. Information maybe updated from time to time so please refer to the website for the latest version of the manual.

Warranty

Conserv Appliances undertakes to the consumer-owner to repair or, at our option, to replace any part of this product which proves to be defective in workmanship or materials under normal personal, family or household use, in the USA and Canada, for a period of one year from the date of original purchase. For commercial use, the product is warranted for a period of 90 days. During this period, we will provide all labor and parts necessary to correct such defect, free of charge, if the appliance has been installed and operated in accordance with the written instructions with the appliance. Ready access to the appliance, for service, is the responsibility of the consumer-owner. Service would be provided from Monday to Friday between normal business hours.

Exclusions

In no event shall Conserv Appliances be liable for incidental or consequential damages or for damages resulting from external causes such as abuse, misuse, incorrect voltage or acts of God. This warranty does not cover service calls which do not involve defective workmanship or materials covered by this warranty. Accordingly, diagnosis and repair costs for a service call which does not involve defective workmanship or materials will be the responsibility of the consumer-owner.

Specifically, the following work is not covered under warranty and does not constitute warranty work:

Installation – e.g. Insufficient spacing around the appliance
Maintenance – e.g. Cleaning the appliance using solvents
Mishandling – e.g. Breakage of door or shelves

Most work is covered. The defining factor is, has the machine malfunctioned (Conserv Appliances is responsible) or has the customer omitted or done something to cause the machine to malfunction (customer is responsible). Some states do not allow the exclusion or limitation of incidental or consequential damages, so the above limitation of exclusion may not apply to you.

GENERAL

Since it is the responsibility of the consumer-owner to establish the warranty period by verifying the original purchase date, Conserv Appliances recommends that a receipt, delivery slip or some other appropriate payment record be kept for that purpose.

This warranty gives you specific legal rights, and you may also have other rights which vary from State to State.

All rights reserved. Manual subject to change without notice.

You can register your Warranty by either of the following methods:

1. Scan QR Code
   - Open Smart Phone
   - Open Camera
   - Click the Link

   ***Note**: The QR code can also be used to submit a Product Review and to access Product Information, Manuals and Updates.*

2. Register online at ApplianceDesk.com/Warranty

Chat-AI
FR 430 SC

WARRANTY SERVICE

This warranty is given by:

Conserv Appliances
5006 Steffani Lane,
Houston, Texas, 77041, USA

For Service:
Call 1-800-776-3538
Email: Service@ApplianceDesk.com
Web: www.ApplianceDesk.com
Business hours: 9:00 am - 5:00 pm weekdays

Congratulations on your new Convertible Upright Freezer - Refrigerator!

In addition to its contemporary design, this is a highly sophisticated engineered product that will give you many years of satisfaction. Here are some of the best reasons for buying your freezer-refrigerator:

- Can be converted from a freezer to a refrigerator
- Compact size can fit in any room
- Recessed handle and flush back for smooth look
- Door is reversible as you prefer
- Adjustable feet to ensure stability
- Can be placed in a garage

Safety ⚠

Do not store explosive substances such as aerosol cans with flammable propellant in this appliance.

Refrigerant and foaming material is flammable. Take precautions during handling, installation, and maintenance.

Ensure that the refrigerant circuit is not damaged.

Keep ventilation openings clear of obstructions.

Use a dedicated 110V electrical outlet and a three-prong power socket, that is properly grounded.

Do not use an extension cord or ungrounded 2 prong adapters.

Do not use a damaged power cord.

When positioning the appliance, ensure the electrical cord is not trapped or damaged.

Do not place multiple portable socket-outlets at the rear of the appliance.

Never unplug the appliance by pulling on the power cord. Grip the plug firmly and pull straight out to remove from wall socket.

Do not connect or disconnect the electrical cord with wet hands.

Do not use mechanical devices or other means to accelerate the defrosting process.

Children should be supervised to ensure that they do not climb on or play with the appliance.

This appliance is not intended for use by children or persons with reduced physical, sensory or mental capabilities, or lack of experience and knowledge, unless they have been given supervision or instruction concerning use of the appliance by a person responsible for their safety.

Safe Disposal

Before discarding the appliance, remove the door in order to prevent risk of child entrapment. Leave shelves in place.

Please dispose of this appliance in accordance with local regulations.

State of California Proposition 65 Warnings:
WARNING: This product contains one or more chemicals known to the State of California to cause cancer.
WARNING: This product contains one or more chemicals known to the State of California to cause birth defects or other reproductive harm.

Installation

This appliance is designed to be free standing and not built in.

Do not tilt the appliance at an angle of more than 45° when moving it.

Place the appliance away from direct sunlight, sources of heat and high humidity, and also away from areas or moisture and exposure to cold temperatures.

Ensure the appliance is placed in a well-ventilated and dry environment.

Plug the appliance into a dedicated, properly installed-grounded wall outlet. Do not cut or remove the third (ground) prong from the power cord.

Check the plug and cable before you connect the power and make sure of the correct voltage. Ensure that the plug is accessible.

Ensure that the appliance is placed on flat and stable ground. Adjust the 2 front feet to make it level.

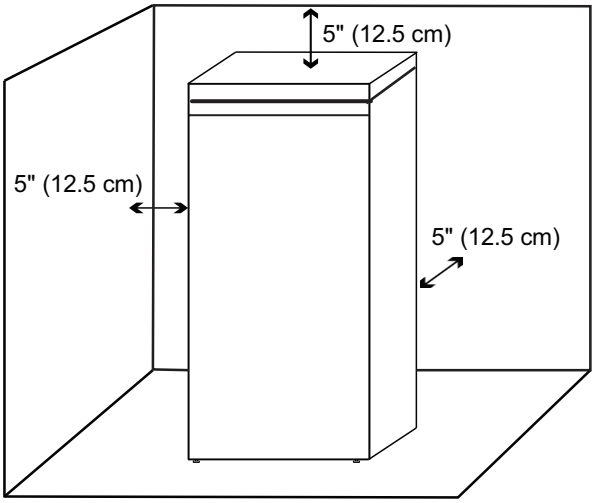

Place the appliance on a flat level surface, leaving 5 inches (12.5 cm) on either side and at least 5 inches (12.5 cm) between back of appliance and the wall.

Before Use

After moving the appliance in place, and before turning it on, keep it standing upright and stable for 6 hours. The appliance should be on for up to 2-3 hours and adequately cold, before putting food in it.

Clean the outside and inside surfaces with a damp soft cloth before putting food in the appliance.

Operation

This appliance is intended for household use.

This appliance can be used as either a Refrigerator or as a Freezer. Turn the Temperature Dial, located at the top of the appliance to select the desired temperature setting. Use the table below as a guide.

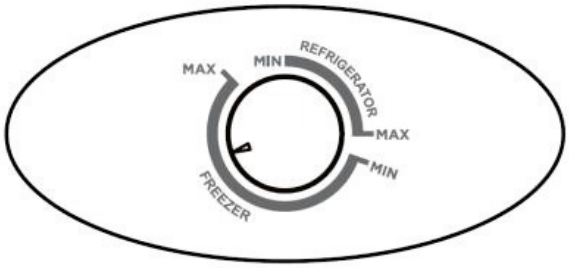

	Temperature Setting	Cold Level	Temperature
Refrigerator	MIN	Least Cold	50°F (10°C)
	MAX	Coldest	32°F (0°C)
Freezer	MIN	Least Cold	14°F (-10°C)
	MAX	Coldest	-11°F (-24°C)

The US Food and Drug Administration (FDA) recommends:

Refrigerator temperature should be between 35°F (1.7°C) to 38°F (3.3°C)

Freezer temperature should be 0°F (-18°C)

***Note**: If the appliance is switched off or after a power failure, wait five minutes before switching on the appliance again to prevent damage to the compressor.*

Maintenance

Ensure the power cord is unplugged before moving or cleaning the back of the appliance.

Clean the outside and inside of the appliance regularly, including the door gasket, using water, mild detergent and a soft cloth.

Please do not use strong chemicals and abrasive materials to clean.

Specifications Table

Model	FR 430 SC
Capacity	4.2 cu. ft.
Electrical	110V
Temperature (Freezer / Refrigerator)	-11°~ 14° F / 32°~ 50°F
Net Weight	90.4 lbs
Product Dimensions (HxWxD)	43.2 x 20.8 x 21.3 in

Door Reversal Instructions

Warning: Unplug the appliance before reversing the door.

It is recommended that 2 people, who are qualified technicians, carry out the door reversal procedure.

The door of the appliance opens to the right. If it is preferable to have the door open to the left, the door swing can be reversed.

Instructions are provided to move the hinges from the right side to the left side. Replace the top door hinge first and then the bottom door hinge. Place the appliance on its back with the door facing up before beginning the procedure.

Top Hinge:

1. Use a screwdriver to remove the top hinge and screws from the right side, and other parts from the left side.

2. Re-install the top hinge and parts removed from the right side on the left side.

3. Install the parts removed from the left side on the right side.

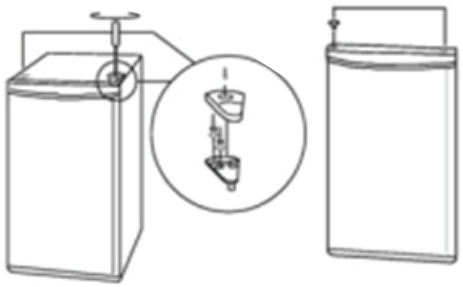

Bottom Hinge:

1. Tilt back the appliance or lay it on its back.

2. Remove bottom hinge and other parts from both sides.

3. Install the bottom hinge on the left side, ensuring to tighten the screws.

4. Plug the holes on the right side with the caps.

5. Check that the door is aligned with the cabinet.

6. Adjust the leveling feet in front to ensure the appliance is level.

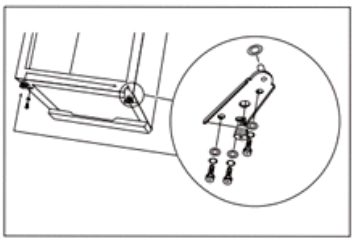

Move the appliance to the vertical standing position and ensure that it remains upright for at least 6 hours before plugging it in and turning the power on.

Troubleshooting

In most cases, when your appliance doesn't work, the problems can be easily solved without having to call for a technician. Before calling for service, please check the following table.

Problem	Possible Cause and Solution
Does not work	• Power is not on, or the unit is not connected to power • Check if it is plugged in correctly to the power source • Check fuse and power socket • Low voltage
Not Cooling	• Temperature is not set correctly. Adjust the temperature • Move unit if near a heat source or in direct sunlight • Check for proper ventilation around the appliance • Check if there are too many items in the appliance • Door opened frequently or not shut properly • Door seal is damaged
Too much noise	• Appliance not placed on flat surface or not level. Adjust the feet to level it • Appliance is against a wall. Move it forward to ensure adequate space behind the appliance
Door does not close properly	• Check the door seal • Shelves are not positioned properly. Adjust the shelves or bins • Ensure no items in the appliance are obstructing the door from closing • Ensure the appliance is level

The following phenomenon is normal:

- Sound of fluid is the compressor when it is starting or stopping
- Flowing sound of refrigerant in the refrigeration system
- The outer surface on the sides of the appliance feel warm
- Condensation forming – wipe with dry cloth