PRODUCT INFORMATION PACKET

Model No: 056T17D15846
Catalog No: FX34FK002
FLEX-IN-1™ General Purpose Motor, 0.75 HP, 3 Ph, 60 Hz, 575 V, 1800 RPM, 56HC Frame, DP



Regal and LEESON are trademarks of Regal Rexnord Corporation or one of its affiliated companies.
©2025 Regal Rexnord Corporation, All Rights Reserved. MC017097E

Nameplate Specifications

Phase	3	Output HP	0.75 Hp
Output KW	0.56 kW	Voltage	575 V
Speed	1725 rpm	Service Factor	1.25
Frame	56HC	Enclosure	Drip Proof
Thermal Protection	No Protection	Efficiency	81.1 %
Ambient Temperature	40 °C	Frequency	60 Hz
Current	1.1 A	Power Factor	67
Duty	Continuous	Insulation Class	F
Design Code	B	KVA Code	N
Drive End Bearing Size	6203	Opp Drive End Bearing Size	6203
UL	Recognized	CSA	Y
CE	Y	IP Code	22
Number of Speeds	1		

Technical Specifications

Electrical Type	Squirrel Cage Inverter Rated	Starting Method	Line Or Inverter
Poles	4	Rotation	Reversible
Resistance Main	0 Ohms	Mounting	Bolt-on Base
Motor Orientation	Horizontal	Drive End Bearing	Ball
Opp Drive End Bearing	Ball	Frame Material	Rolled Steel
Shaft Type	NEMA 56	Shaft Diameter	0.625 in
Assembly/Box Mounting	F1 F2/F3 CAPABLE	Inverter Load	CONSTANT 2:1
Outline Drawing	OL56100838-001	Connection Drawing	CDTS141

This is an uncontrolled document once printed or downloaded and is subject to change without notice. Date Created:07/28/2025

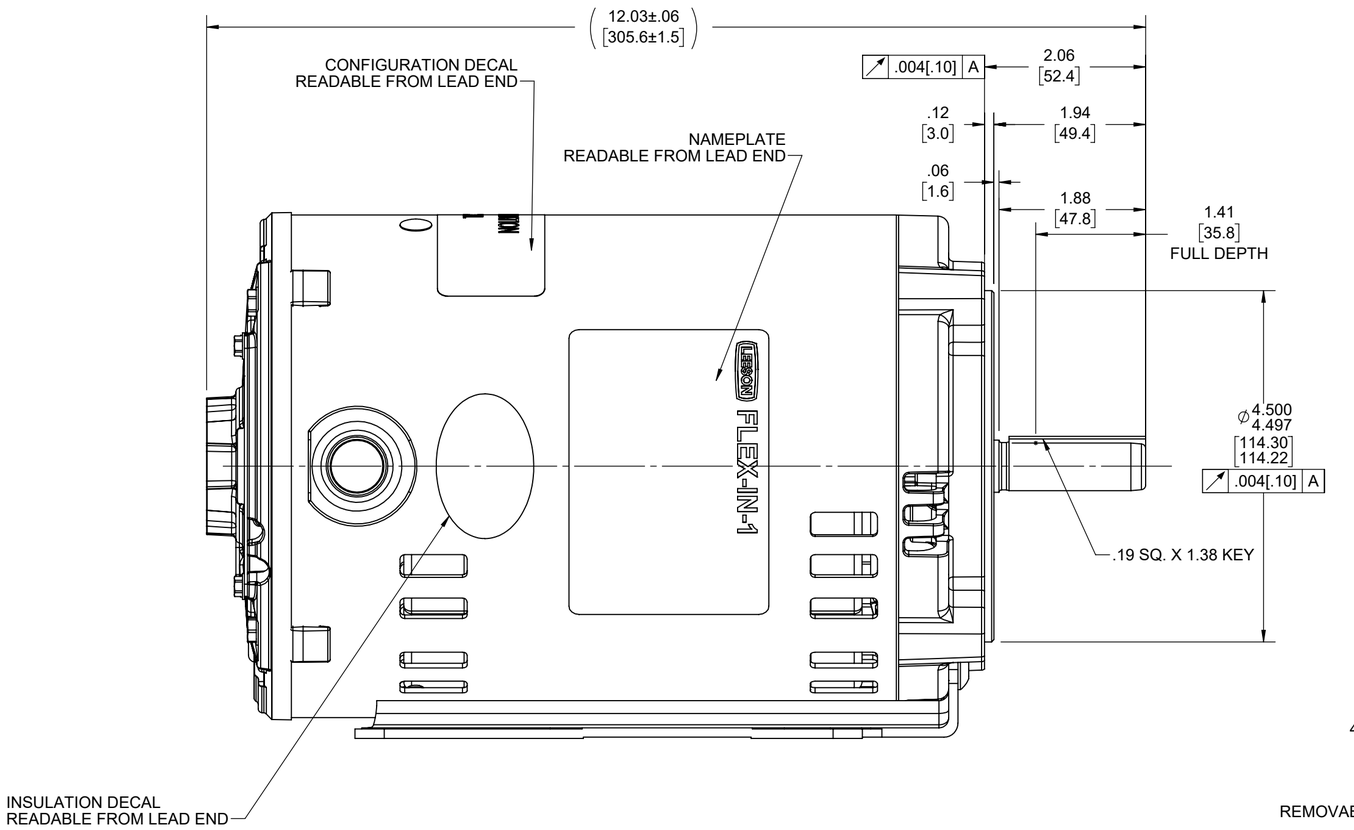

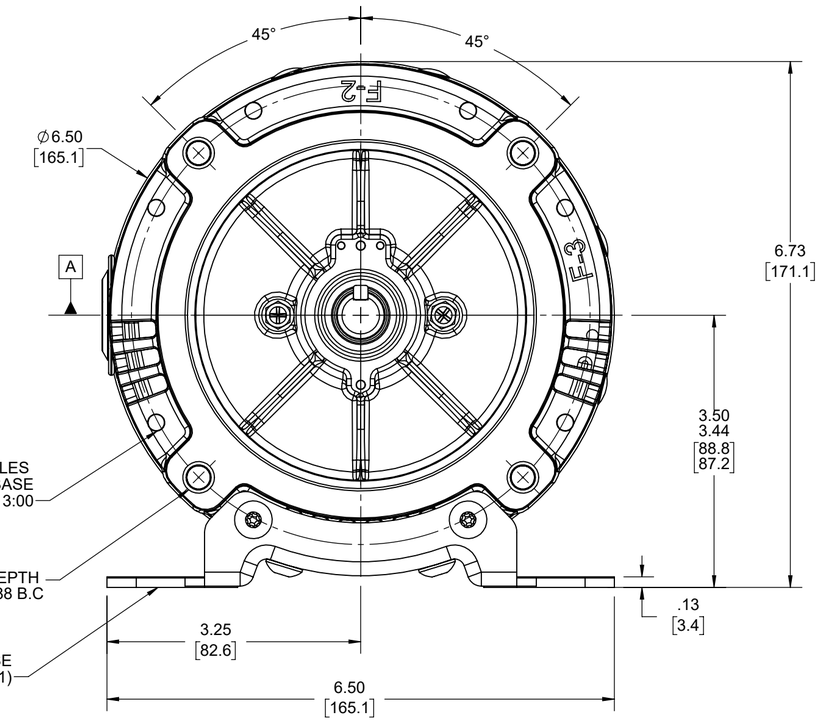

NOTES:

1) REMOVABLE / REPOSITIONAL BASE CAN BE REMOVED FOR C-FACE MOUNTING OR REPOSITIONED TO 12:00 OR 3:00 FACING SHAFT END OF MOTOR FOR NEMA F-2 OR F-3 CONDUIT BOX LOCATION.
2) KEY TO BE SHIPPED IN BAG WITH HOLE PLUGS AND BASE MOUNTING INSTRUCTION SHEET.

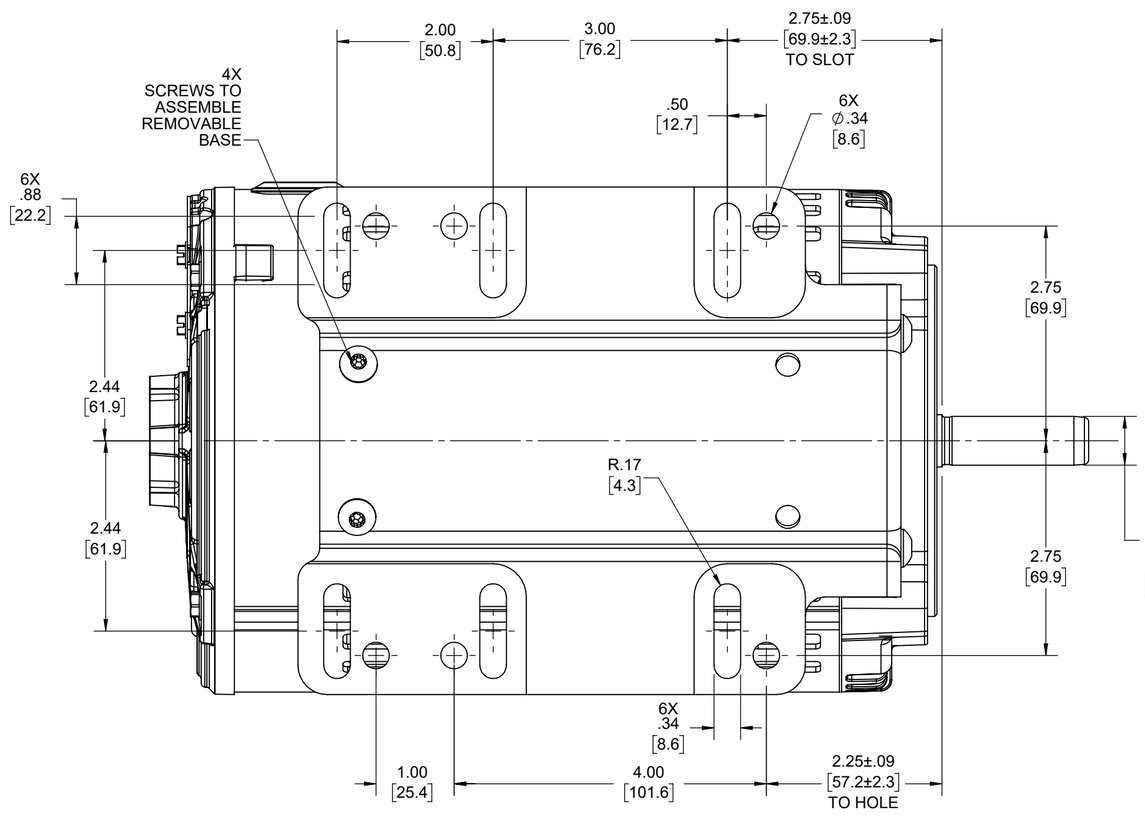

PLUGGED BASE MOUNTING HOLES
FOR REPOSITONING BASE @12:00 OR 3:00

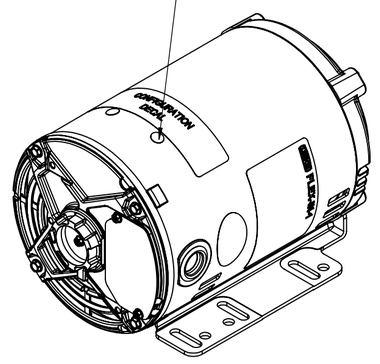

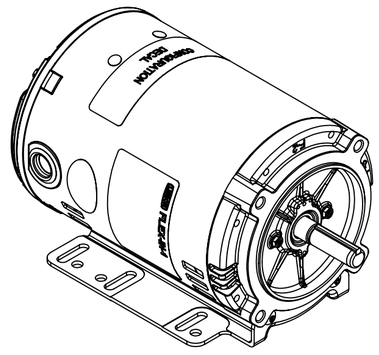

DRAWING REVISION: F	REVISION BY: M.P	REV DATE/© DATE: 03/07/2024
REQUEST NUMBER: ECR-0231732	APPROVED BY: P.V.R	DATE: 03/07/2024
REQUEST NUMBER DESCRIPTION: UPDATED AS PER ECR		

COPYRIGHT (PER REVISION DATE) REGAL BELOIT AMERICA, INC. ALL RIGHTS RESERVED. PROPRIETARY AND CONFIDENTIAL INFORMATION - THIS DOCUMENT IS THE PROPERTY OF REGAL BELOIT AMERICA, INC. ("OWNER") AND CONTAINS OWNER'S PROPRIETARY INFORMATION. ANY PERSON, CORPORATION OR OTHER FIRM RECEIVING IT IS DEEMED, BY RECEIVING IT, TO AGREE THAT IT, AND/OR ANY PART OF IT, SHALL NOT BE DISCLOSED TO ANY PERSON, CORPORATION OR OTHER ENTITY, DUPLICATED, AND/OR USED, EXCEPT AS EXPRESSLY APPROVED IN WRITING IN ADVANCE BY OWNER. THIS DOCUMENT SHALL BE RETURNED TO OWNER UPON REQUEST. IT MAY BE SUBJECT TO CERTAIN RESTRICTIONS UNDER APPLICABLE EXPORT CONTROL LAWS AND REGULATIONS.

TOLERANCES (EXCEPT AS NOTED):

DEC.	INCH	mm	ANGLE
.X	±0.1	[±3]	±0.5°
.XX	±0.02	[±0.5]	
.XXX	±0.005	[±0.13]	
.XXXX	±0.0005	[±0.013]	

REMOVE BURRS & BREAK SHARP EDGES: .003/.015 [.08/.38] X 45°
CORNER FILLETS: R.02 [.5]
MACHINED SURFACES: 125 INCH / 3.2 mm
mm DIMENSIONS IN [BRACKETS] ARE FOR REFERENCE ONLY

DRAWN BY: SRIKANTH	Regal Rexnord	Regal Beloit America, Inc.	
DATE: 07/04/2022			
APPROVED BY: PRADEEP	DESCRIPTION: OUTLINE		
DATE: 07/04/2022	56-140FR, DP, C-FACE, BOLT ON		
REFERENCE	MATERIAL	PROCESS/FINISH	
THIRD ANGLE PROJECTION	SIZE: C	DRAWING NUMBER: OL56100838-001	SHEET: 1 OF3

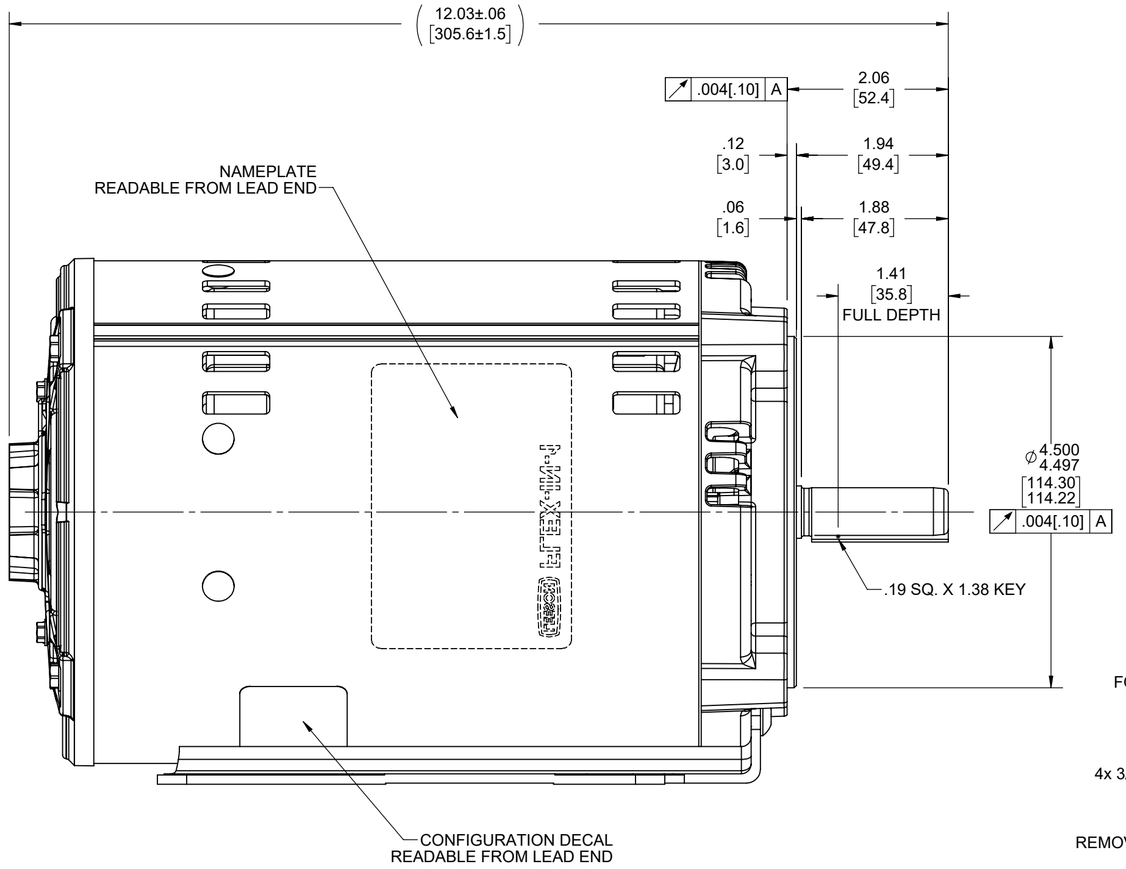

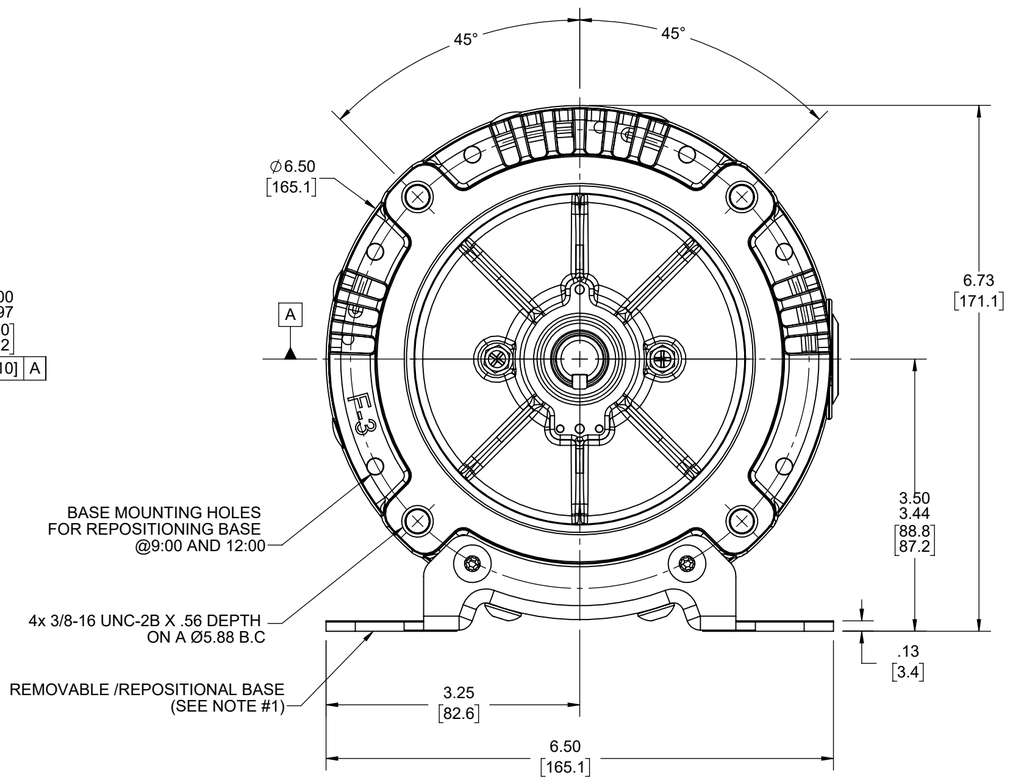

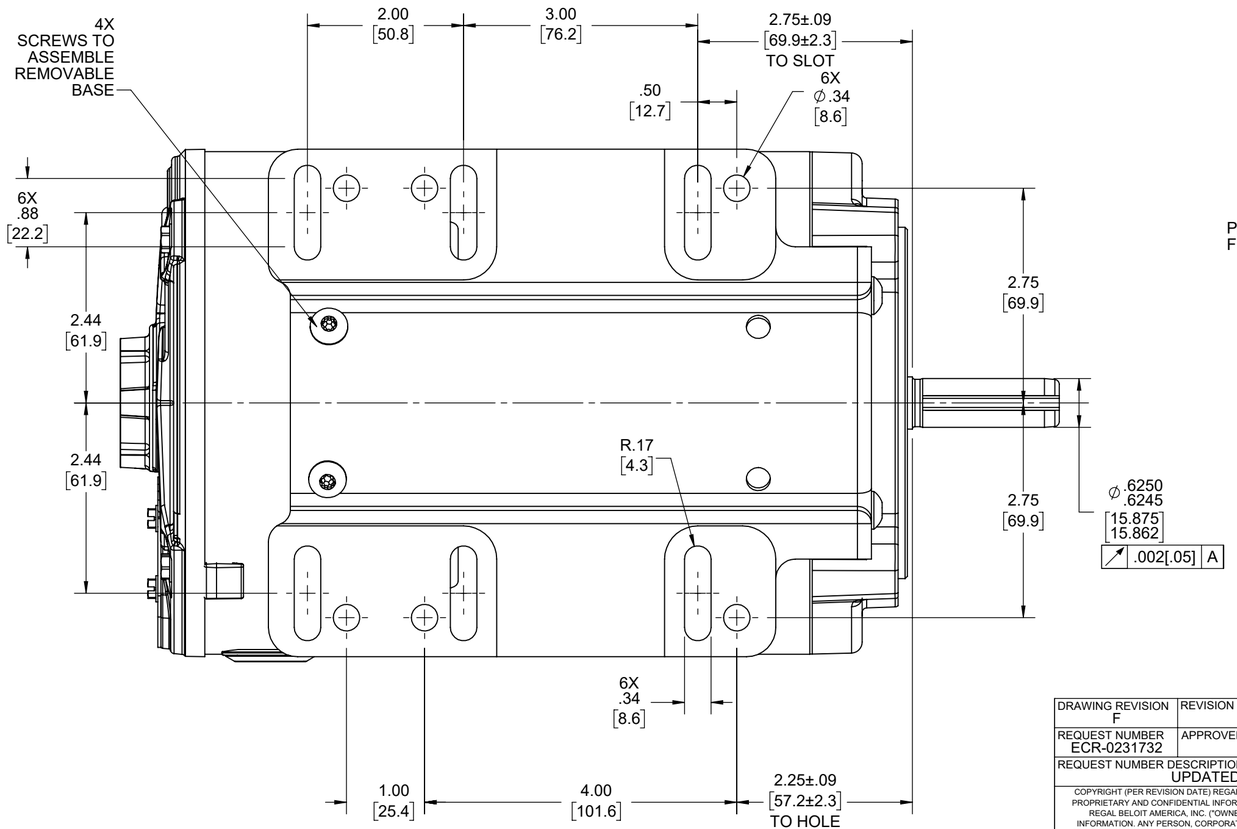

NOTES:

1) REMOVABLE / REPOSITIONAL BASE CAN BE REMOVED FOR C-FACE MOUNTING OR REPOSITIONED TO 12:00 OR 9:00 FACING SHAFT END OF MOTOR FOR NEMA F-1 OR F-3 CONDUIT BOX LOCATION.
2) KEY TO BE SHIPPED IN BAG WITH HOLE PLUGS AND BASE MOUNTING INSTRUCTION SHEET.

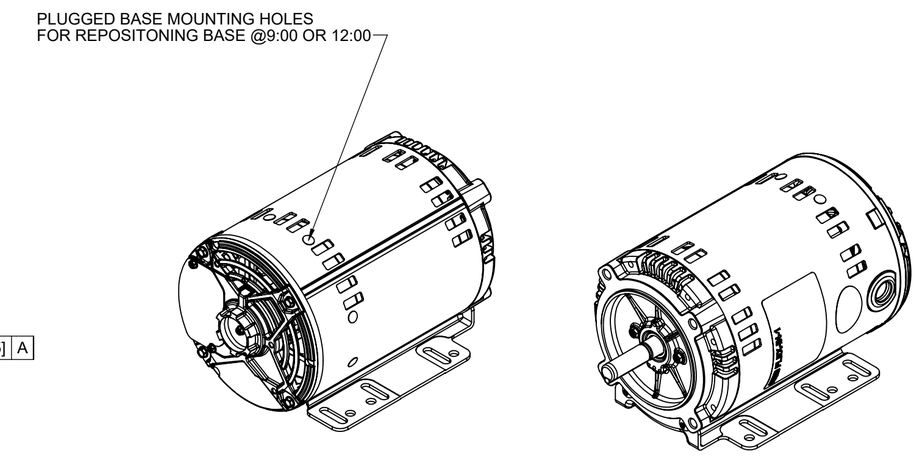

DRAWING REVISION: F	REVISION BY: M.P	REV DATE/© DATE: 03/07/2024
REQUEST NUMBER: ECR-0231732	APPROVED BY: P.V.R	DATE: 03/07/2024
REQUEST NUMBER DESCRIPTION: UPDATED AS PER ECR		

COPYRIGHT (PER REVISION DATE) REGAL BELOIT AMERICA, INC. ALL RIGHTS RESERVED. PROPRIETARY AND CONFIDENTIAL INFORMATION - THIS DOCUMENT IS THE PROPERTY OF REGAL BELOIT AMERICA, INC. ("OWNER") AND CONTAINS OWNER'S PROPRIETARY INFORMATION. ANY PERSON, CORPORATION OR OTHER FIRM RECEIVING IT IS DEEMED, BY RECEIVING IT, TO AGREE THAT IT, AND/OR ANY PART OF IT, SHALL NOT BE DISCLOSED TO ANY PERSON, CORPORATION OR OTHER ENTITY, DUPLICATED, AND/OR USED, EXCEPT AS EXPRESSLY APPROVED IN WRITING IN ADVANCE BY OWNER. THIS DOCUMENT SHALL BE RETURNED TO OWNER UPON REQUEST. IT MAY BE SUBJECT TO CERTAIN RESTRICTIONS UNDER APPLICABLE EXPORT CONTROL LAWS AND REGULATIONS.

TOLERANCES (EXCEPT AS NOTED):

DEC.	INCH	mm	ANGLE
.X	±0.1	[±3]	±0.5°
.XX	±0.02	[±0.5]	
.XXX	±0.005	[±0.13]	
.XXXX	±0.0005	[±0.013]	

REMOVE BURRS & BREAK SHARP EDGES: .003/.015 [.08/.38] X 45° CORNER FILLETS: R.02 [.5]
MACHINED SURFACES: 125 INCH / 3.2 mm
mm DIMENSIONS IN [BRACKETS] ARE FOR REFERENCE ONLY

DRAWN BY: SRIKANTH	Regal Rexnord — Regal Beloit America, Inc.
DATE: 07/04/2022	
APPROVED BY: PRADEEP	DESCRIPTION: OUTLINE
DATE: 07/04/2022	56-140FR, DP, C-FACE, BOLT ON
REFERENCE	MATERIAL / PROCESS/FINISH
THIRD ANGLE PROJECTION	SIZE: C — DRAWING NUMBER: OL56100838-001 — SHEET: 2 OF3

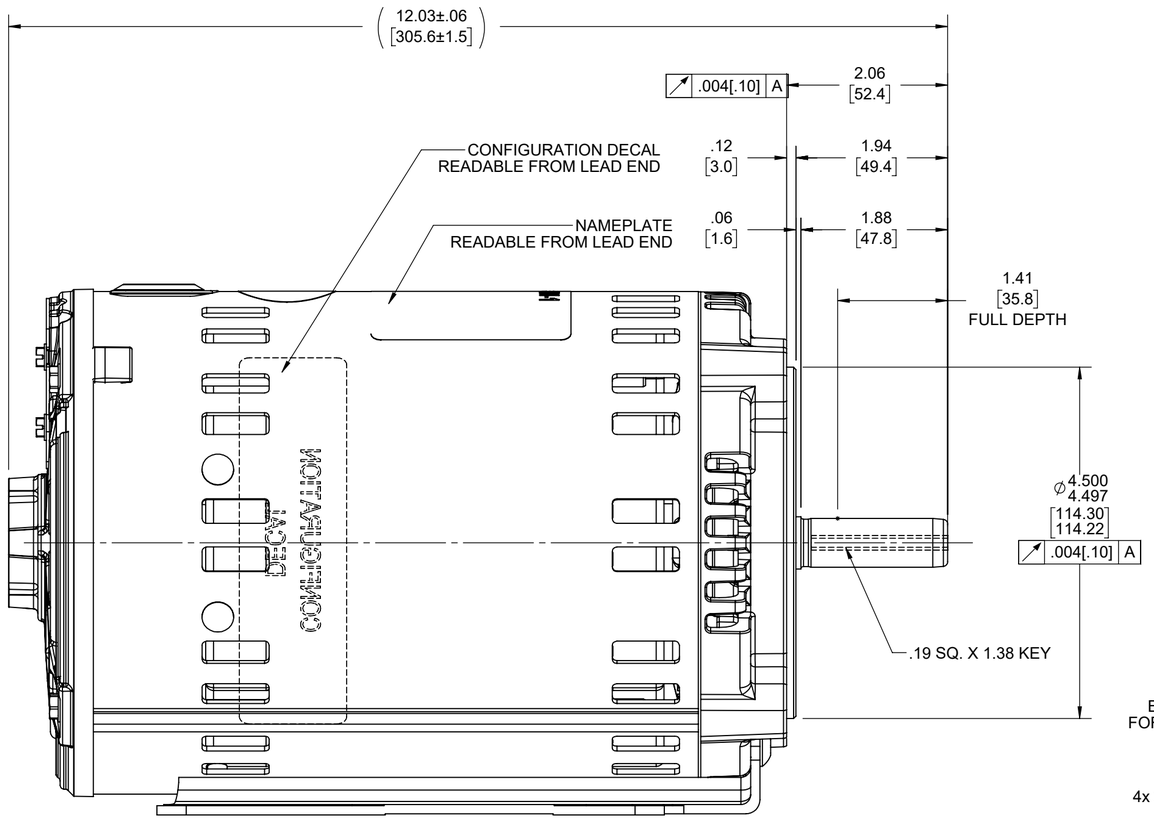

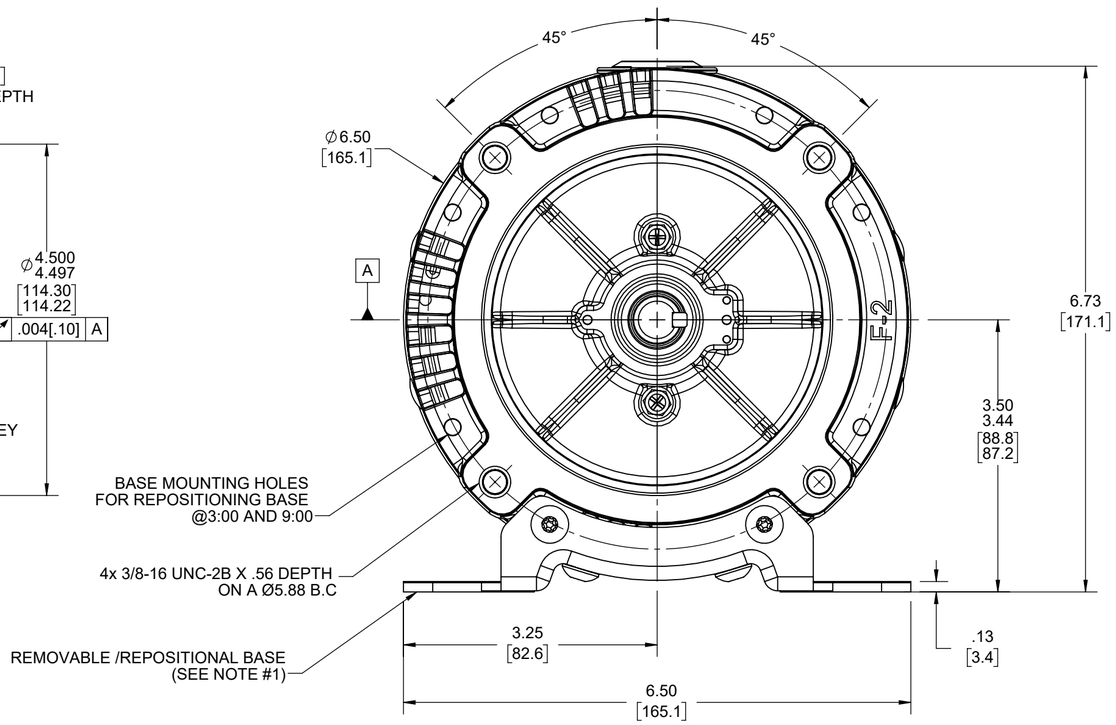

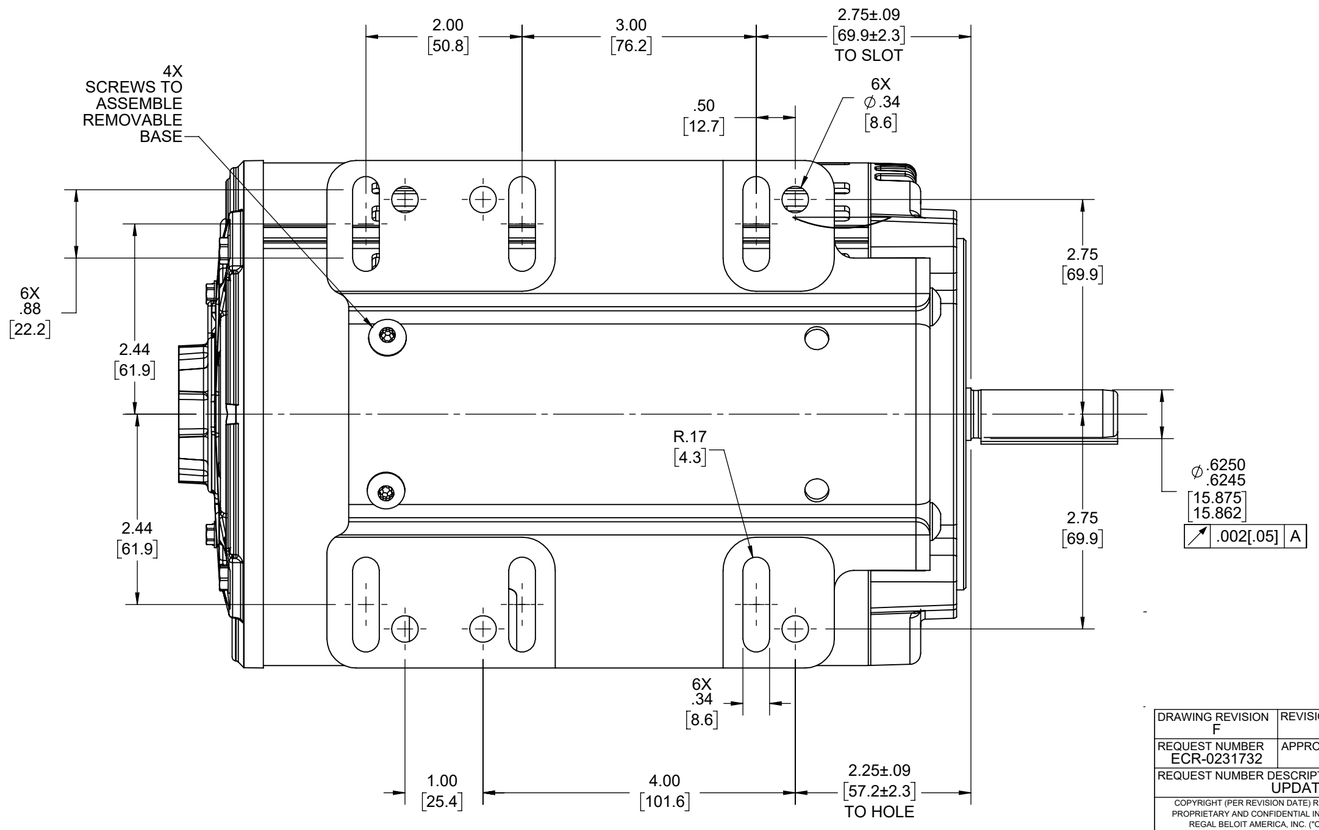

NOTES:

1) REMOVABLE / REPOSITIONAL BASE CAN BE REMOVED FOR C-FACE MOUNTING OR REPOSITIONED TO 9:00 OR 3:00 FACING SHAFT END OF MOTOR FOR NEMA F-1 OR F-2 CONDUIT BOX LOCATION.
2) KEY TO BE SHIPPED IN BAG WITH HOLE PLUGS AND BASE MOUNTING INSTRUCTION SHEET.

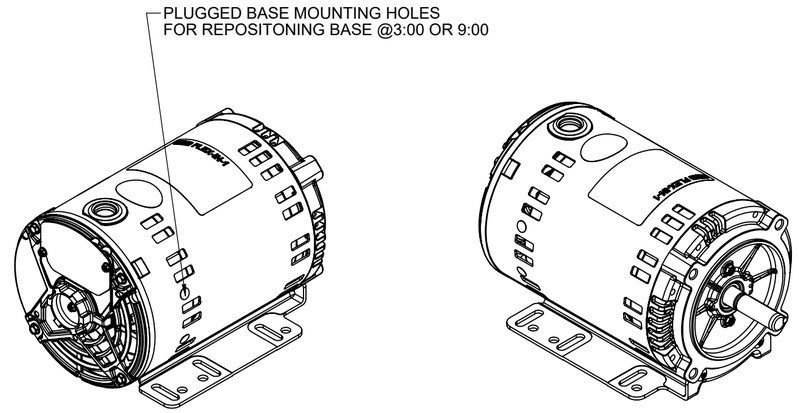

DRAWING REVISION: F	REVISION BY: M.P	REV DATE/© DATE: 03/07/2024	
REQUEST NUMBER: ECR-0231732	APPROVED BY: P.V.R	DATE: 03/07/2024	
REQUEST NUMBER DESCRIPTION: UPDATED AS PER ECR			

COPYRIGHT (PER REVISION DATE) REGAL BELOIT AMERICA, INC. ALL RIGHTS RESERVED. PROPRIETARY AND CONFIDENTIAL INFORMATION - THIS DOCUMENT IS THE PROPERTY OF REGAL BELOIT AMERICA, INC. ("OWNER") AND CONTAINS OWNER'S PROPRIETARY INFORMATION. ANY PERSON, CORPORATION OR OTHER FIRM RECEIVING IT IS DEEMED, BY RECEIVING IT, TO AGREE THAT IT, AND/OR ANY PART OF IT, SHALL NOT BE DISCLOSED TO ANY PERSON, CORPORATION OR OTHER ENTITY, DUPLICATED, AND/OR USED, EXCEPT AS EXPRESSLY APPROVED IN WRITING IN ADVANCE BY OWNER. THIS DOCUMENT SHALL BE RETURNED TO OWNER UPON REQUEST. IT MAY BE SUBJECT TO CERTAIN RESTRICTIONS UNDER APPLICABLE EXPORT CONTROL LAWS AND REGULATIONS.

TOLERANCES (EXCEPT AS NOTED):

DEC.	INCH	mm	ANGLE
.X	±0.1	[±3]	±0.5°
.XX	±0.02	[±0.5]	
.XXX	±0.005	[±0.13]	
.XXXX	±0.0005	[±0.013]	

REMOVE BURRS & BREAK SHARP EDGES: .003/.015 [.08/.38] X 45°
CORNER FILLETS: R.02 [.5]
MACHINED SURFACES: 125 INCH / 3.2 mm
mm DIMENSIONS IN [BRACKETS] ARE FOR REFERENCE ONLY

DRAWN BY: SRIKANTH	Regal Rexnord	Regal Beloit America, Inc.	
DATE: 07/04/2022			
APPROVED BY: PRADEEP	DESCRIPTION: OUTLINE 56-140FR, DP, C-FACE, BOLT ON		
DATE: 07/04/2022			
REFERENCE	MATERIAL	PROCESS/FINISH	
THIRD ANGLE PROJECTION	SIZE: C	DRAWING NUMBER: OL56100838-001	SHEET: 3 OF3

Uncontrolled Copy

001

SINGLE VOLTAGE-THREE PHASE WITHOUT PROTECTOR

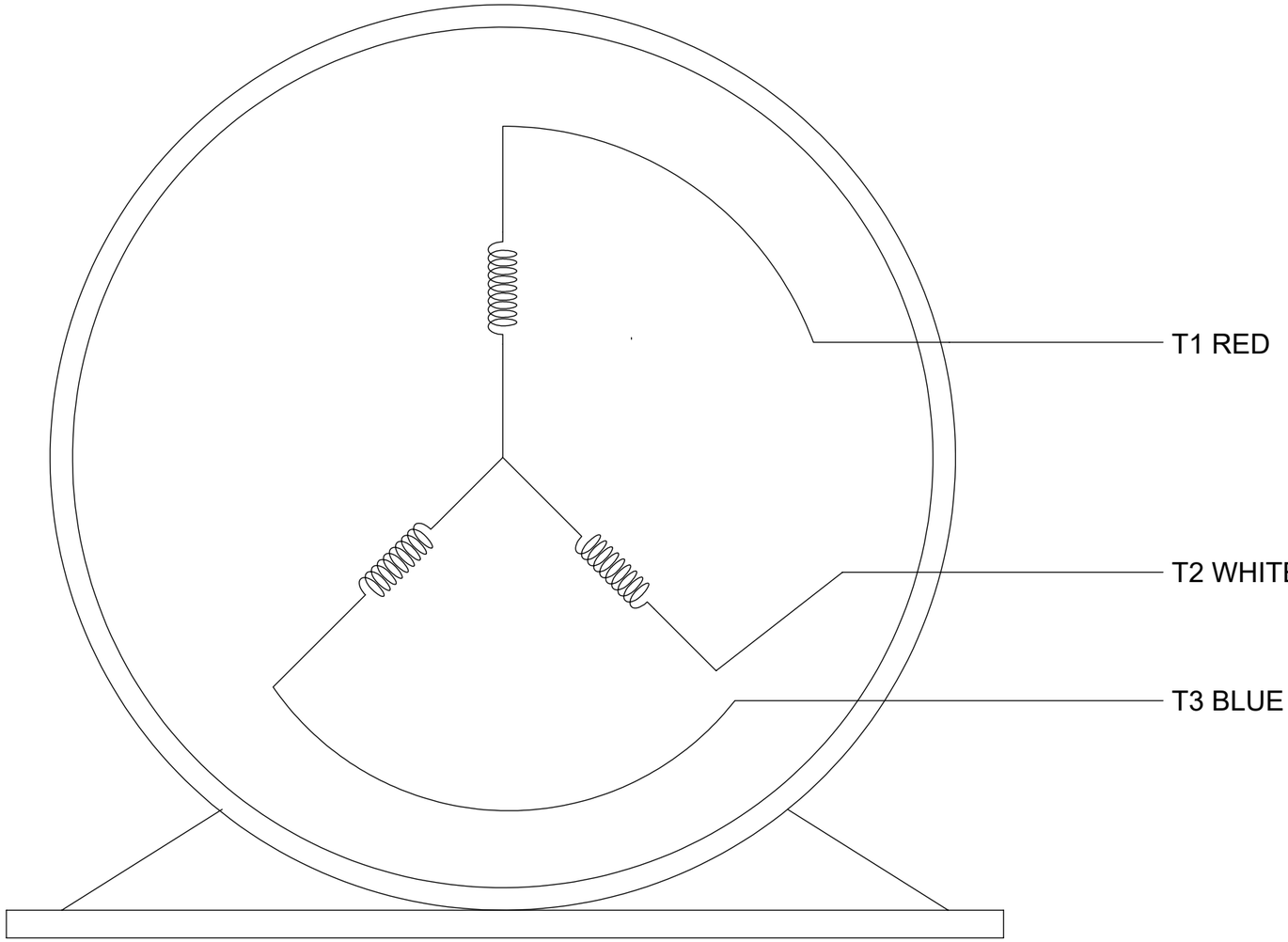

VIEW OF TERMINAL END

CCW-SINGLE VOLTAGE

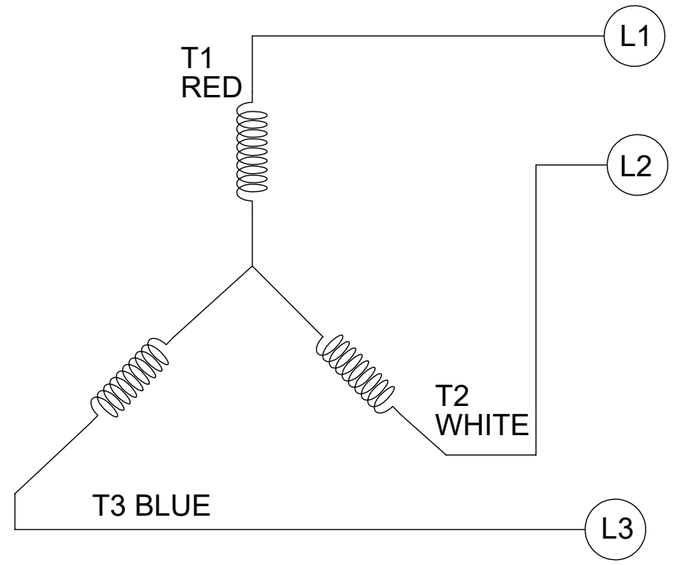

NOTES:

1. TO REVERSE ROTATION, INTERCHANGE ANY TWO LINE CONNECTIONS TO L1, L2, OR L3.
2. CONNECTION DIAGRAM-NAMEPLATE DD10213-001

DRAWING REVISION	REVISION BY	REV DATE/© DATE
B	PRASHANTH	06/22/2022
REQUEST NUMBER	APPROVED BY	DATE
NMR-0213855	BHARGAVI	06/22/2022

REQUEST NUMBER DESCRIPTION
CHANGED NOTES FROM LOW TO SINGLE VOLTAGE

COPYRIGHT (PER REVISION DATE) REGAL BELOIT AMERICA, INC. ALL RIGHTS RESERVED. PROPRIETARY AND CONFIDENTIAL INFORMATION - THIS DOCUMENT IS THE PROPERTY OF REGAL BELOIT AMERICA, INC. ("OWNER") AND CONTAINS OWNER'S PROPRIETARY INFORMATION. ANY PERSON, CORPORATION OR OTHER FIRM RECEIVING IT IS DEEMED, BY RECEIVING IT, TO AGREE THAT IT, AND/OR ANY PART OF IT, SHALL NOT BE DISCLOSED TO ANY PERSON, CORPORATION OR OTHER ENTITY, DUPLICATED, AND/OR USED, EXCEPT AS EXPRESSLY APPROVED IN WRITING IN ADVANCE BY OWNER. THIS DOCUMENT SHALL BE RETURNED TO OWNER UPON REQUEST. IT MAY BE SUBJECT TO CERTAIN RESTRICTIONS UNDER APPLICABLE EXPORT CONTROL LAWS AND REGULATIONS.

TOLERANCES (EXCEPT AS NOTED):

DEC.	INCH	mm	ANGLE
.X	±0.1	[±3]	±0.5°
.XX	±0.01	[±0.3]	
.XXX	±0.005	[±0.13]	
.XXXX	±0.0005	[±0.013]	

REMOVE BURRS & BREAK SHARP EDGES: .003/.015 [.08/.38] X 45°
CORNER FILLETS: R.02 [.5]
MACHINED SURFACES: 125 INCH / 3.2 mm
mm DIMENSIONS IN [BRACKETS] ARE FOR REFERENCE ONLY

DRAWN BY	SHESHI
DATE	03/07/2019
APPROVED BY	BHARGAVI
DATE	03/07/2019
REFERENCE	CDTS139

Regal Rexnord — Regal Beloit America, Inc.

DESCRIPTION: CONN DIAGRAM-EXTERNAL

MATERIAL | PROCESS/FINISH

THIRD ANGLE PROJECTION

SIZE	DRAWING NUMBER	SHEET
B	CDTS141	1 OF 1

EC Declaration of Conformity

The undersigned representing
the manufacturer:

Regal Beloit America
1946 West Cook Road
Fort Wayne, IN 46818

and the authorized representative
established within the Community:

Regal Beloit Italy
Via Modena, 18
24040 Ciserano(BG) - Italy

are committed to providing customers with products that comply with applicable regulations and international protocols to which they are subject, including the requirements of the European Parliament Directive on the Harmonization of the laws relating to electrical equipment designed for use within certain voltage limits (2014/35/EU).

Regal Beloit America declares that the following product(s), to which this declaration relates, are in conformity with the relevant sections of the EC standards listed below.

This statement supersedes any statements previously issued pertaining to the product(s) listed below and is subject to change without notice.

Model No : 056T17D15846

(Model No. may contain prefix and/or suffix characters)

Catalog No : FX34FK002

Rework No : N/A

Directives :

Low Voltage Directive 2014/35/EU

Harmonized Standards Used :

EN 60034-1: 2010 (IEC 60034-1: 2010)
EN 60034-5: 2001/A1:2007 (IEC 60034-5: 2000/A1:2006)

Authorized Representative:

Zach Stauffer
Vice President, Engineering

Authorized Representative in the Community:

Stefano Casiraghi
Technology Director, Engineering

Created on 07/08/2025

CE 25