ABB BALDOR RELIANCE

# Customer information packet

## WDM3542

.75HP, 1765RPM, 3PH, 60HZ, 56, 3514M, TENV, F1
Class - None
Division - Not Applicable

Copyright © All product information within this document is subject to ABB Motors and Mechanical Inc. copyright © protection, unless otherwise noted.
11/5/2026 3:48:53 PM

## Specifications

| | |
|---|---|
| **Enclosure** | TENV |
| **Frame** | 56 |
| **Frame Material** | Steel |
| **Frequency** | 60.00 Hz |
| **Haz Area Class and Group** | None |
| **Haz Area Division** | Not Applicable |
| **Motor Letter Type** | Three Phase |
| **Output @ Frequency** | .750 HP @ 60 HZ |
| **Phase** | 3 |
| **Synchronous Speed @ Frequency** | 1800 RPM @ 60 HZ |
| **Voltage @ Frequency** | 230.0 V @ 60 HZ |
| | 460.0 V @ 60 HZ |
| **Agency Approvals** | CSA |
| | UR |
| **Ambient Temperature** | 40 °C |
| **Auxiliary Box** | NO AUXILLARY BOX |
| **Auxiliary Box Lead Termination** | None |
| **Base Indicator** | Rigid |
| **Bearing Grease Type** | Polyrex EM (-20F +300F) |
| **Blower** | None |
| **Current @ Voltage** | 1.140 A @ 460.0 V |
| | 2.280 A @ 230.0 V |
| | 2.400 A @ 208.0 V |
| **Design Code** | B |
| **Drip Cover** | No Drip Cover |
| **Duty Rating** | CONT |
| **Efficiency @ 100% Load** | 82.5 % |
| **Electrically Isolated Bearing** | Not Electrically Isolated |
| **Feedback Device** | NO FEEDBACK |
| **Front Shaft Indicator** | None |
| **Heater Indicator** | No Heater |
| **High Voltage Full Load Amps** | 1.1 a |

## Part Detail

| | |
|---|---|
| **Revision** | F |
| **Type** | AC |
| **Mech. spec.** | 35S578 |
| **Base** | |
| **Status** | PRD/A |
| **Elec. spec.** | 35WGG069 |
| **Layout** | 35LYS578 |
| **Eff. date** | 04-02-2024 |
| **CD Diagram** | CD0005 |
| **Poles** | 04 |
| **Leads** | 9#18 |
| **Proprietary** | False |
| **Created date** | 01-10-2022 |

| | |
|---|---|
| **Insulation Class** | F |
| **Inverter Code** | Not Inverter |
| **KVA Code** | K |
| **Lifting Lugs** | No Lifting Lugs |
| **Locked Bearing Indicator** | No Locked Bearing |
| **Motor Lead Quantity/Wire Size** | 9 @ 18 AWG |
| **Motor Lead Termination** | Flying Leads |
| **Motor Standards** | NEMA |
| **Motor Type** | 3514M |
| **Mounting Arrangement** | F1 |
| **Number of Poles** | 4 |
| **Overall Length** | 11.06 IN |
| **Power Factor** | 74 |
| **Product Family** | Wash Down |
| **Pulley End Bearing Type** | Sealed Bearing |
| **Pulley Face Code** | Standard |
| **Pulley Shaft Indicator** | Standard |
| **Rodent Screen** | None |
| **Service Factor** | 1.25 |
| **Shaft Diameter** | 0.625 IN |
| **Shaft Ground Indicator** | No Shaft Grounding |
| **Shaft Rotation** | Reversible |
| **Shaft Slinger Indicator** | Shaft Slinger |
| **Speed** | 1765 rpm |
| **Speed Code** | Single Speed |
| **Starting Method** | Direct on line |
| **Thermal Device - Bearing** | None |
| **Thermal Device - Winding** | None |
| **Vibration Sensor Indicator** | No Vibration Sensor |
| **Winding Thermal 1** | None |
| **Winding Thermal 2** | None |

**Nameplate**

| NP1496L | | | | | | | | | |
|---|---|---|---|---|---|---|---|---|---|
| **CAT.NO.** | WDM3542 | | | | | | | | |
| **SPEC.** | 35S578G069G1 | | | | | | | | |
| **HP** | .75 | | | | | | | | |
| **VOLTS** | 230/460 | | | | | | | | |
| **AMP** | 2.4/1.2 | | | | | | | | |
| **RPM** | 1765 | | | | | | | | |
| **FRAME** | 56 | | **HZ** | 60 | | | **PH** | 3 | |
| **SER.F.** | 1.25 | **CODE** | K | **DES** | B | **CLASS** | | F | |
| **NEMA-NOM-EFF** | 82.5 | **PF** | 74 | | | | | | |
| **RATING** | 40C AMB-CONT | | | | | | | | |
| **CC** | | | | | | | | | |
| **DE** | 6205 | | **ODE** | 6203 | | | | | |
| **ENCL** | TENV | **SN** | | | | | | | |
| | SFA 2.68/1.34 | | | | | | | | |

**AC Induction Motor Performance Data**
Record # 87322
Typical performance - not guaranteed values

| **Winding:** 35WGG069-R009 | **Type:** 3514M | **Enclosure:** TENV |
|---|---|---|

| **Nameplate Data** | | | | **460 V, 60 Hz: High Voltage Connection** | |
|---|---|---|---|---|---|
| **Rated Output (HP)** | | | .75 | **Full Load Torque** | 2.24 LB-FT |
| **Volts** | | | 230/460 | **Start Configuration** | direct on line |
| **Full Load Amps** | | | 2.42/2.42 | **Breakdown Torque** | 8 LB-FT |
| **R.P.M.** | | | 1765 | **Pull-up Torque** | 4.4 LB-FT |
| **Hz** | 60 | **Phase** | 3 | **Locked-rotor Torque** | 5.1 LB-FT |
| **NEMA Design Code** | B | **KVA Code** | K | **Starting Current** | 8.4 A |
| **Service Factor (S.F.)** | | | 1.25 | **No-load Current** | 0.85 A |
| **NEMA Nom. Eff.** | 82.5 | **Power Factor** | 74 | **Line-line Res. @ 25ºC** | 30.3 Ω |
| **Rating - Duty** | | | 40C AMB-CONT | **Temp. Rise @ Rated Load** | 75°C |
| **S.F. Amps** | | | 2.8/1.4 | **Temp. Rise @ S.F. Load** | 94°C |
| | | | | **Locked-rotor Power Factor** | 66.8 |
| | | | | **Rotor inertia** | 0.101 lb-ft² |

**Load Characteristics 460 V, 60 Hz, 0.75 HP**

| **% of Rated Load** | **25** | **50** | **75** | **100** | **125** | **150** | **S.F.** |
|---|---|---|---|---|---|---|---|
| **Power Factor** | 30 | 48 | 61 | 70 | 77 | 81 | 80 |
| **Efficiency** | 68.4 | 79 | 82.2 | 82.9 | 82.4 | 81.2 | 82.8 |
| **Speed** | 1791 | 1783 | 1775 | 1766 | 1757 | 1746 | 1752 |
| **Line amperes** | 0.87 | 0.95 | 1.06 | 1.21 | 1.4 | 1.61 | 1.34 |

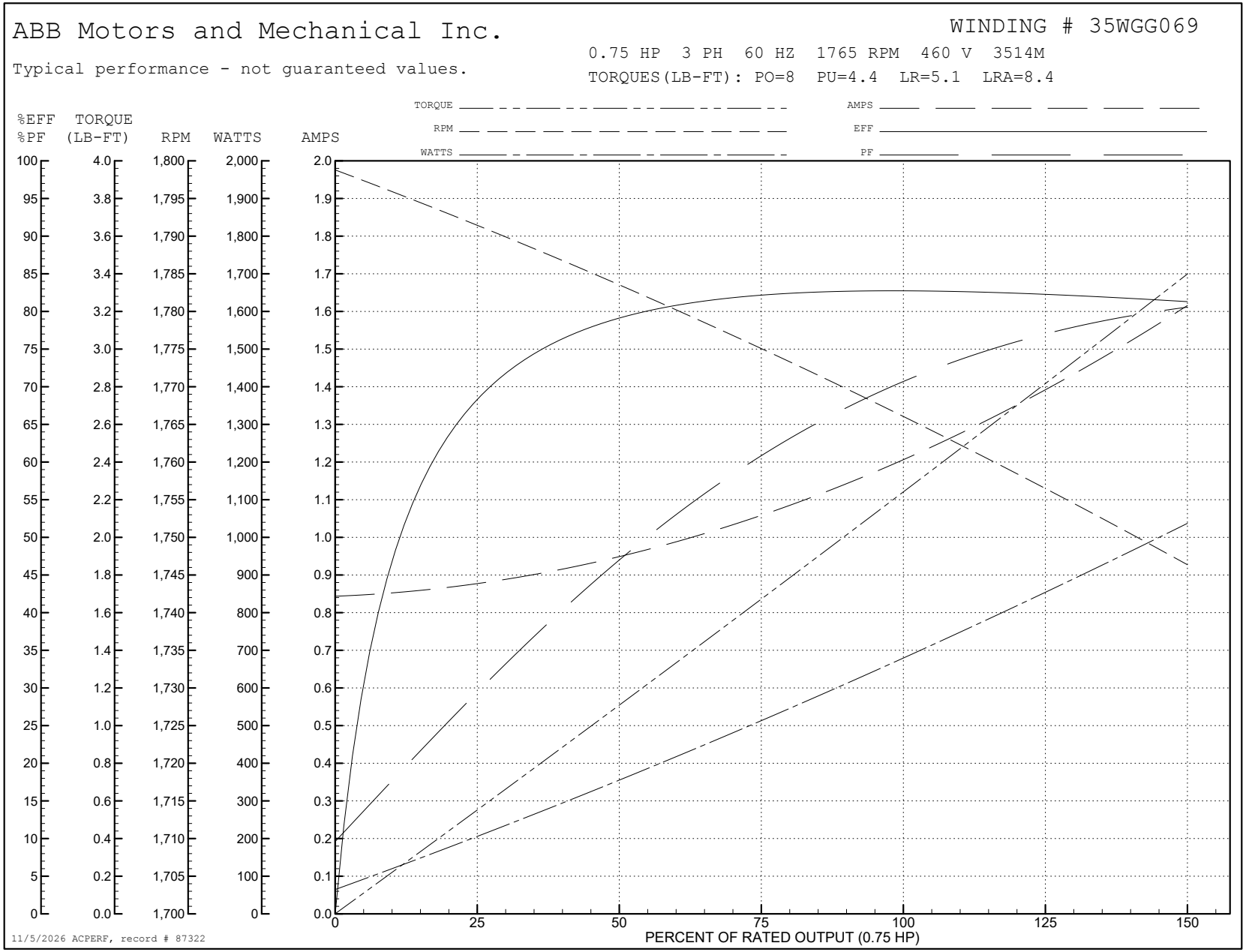
ABB Motors and Mechanical Inc.
WINDING # 35WGG069
Typical performance - not guaranteed values.
0.75 HP 3 PH 60 HZ 1765 RPM 460 V 3514M
TORQUES(LB-FT): PO=8 PU=4.4 LR=5.1 LRA=8.4
TORQUE
RPM
WATTS
AMPS
EFF
PF
%EFF %PF
TORQUE (LB-FT)
RPM
WATTS
AMPS
PERCENT OF RATED OUTPUT (0.75 HP)
11/5/2026 ACPERF, record # 87322

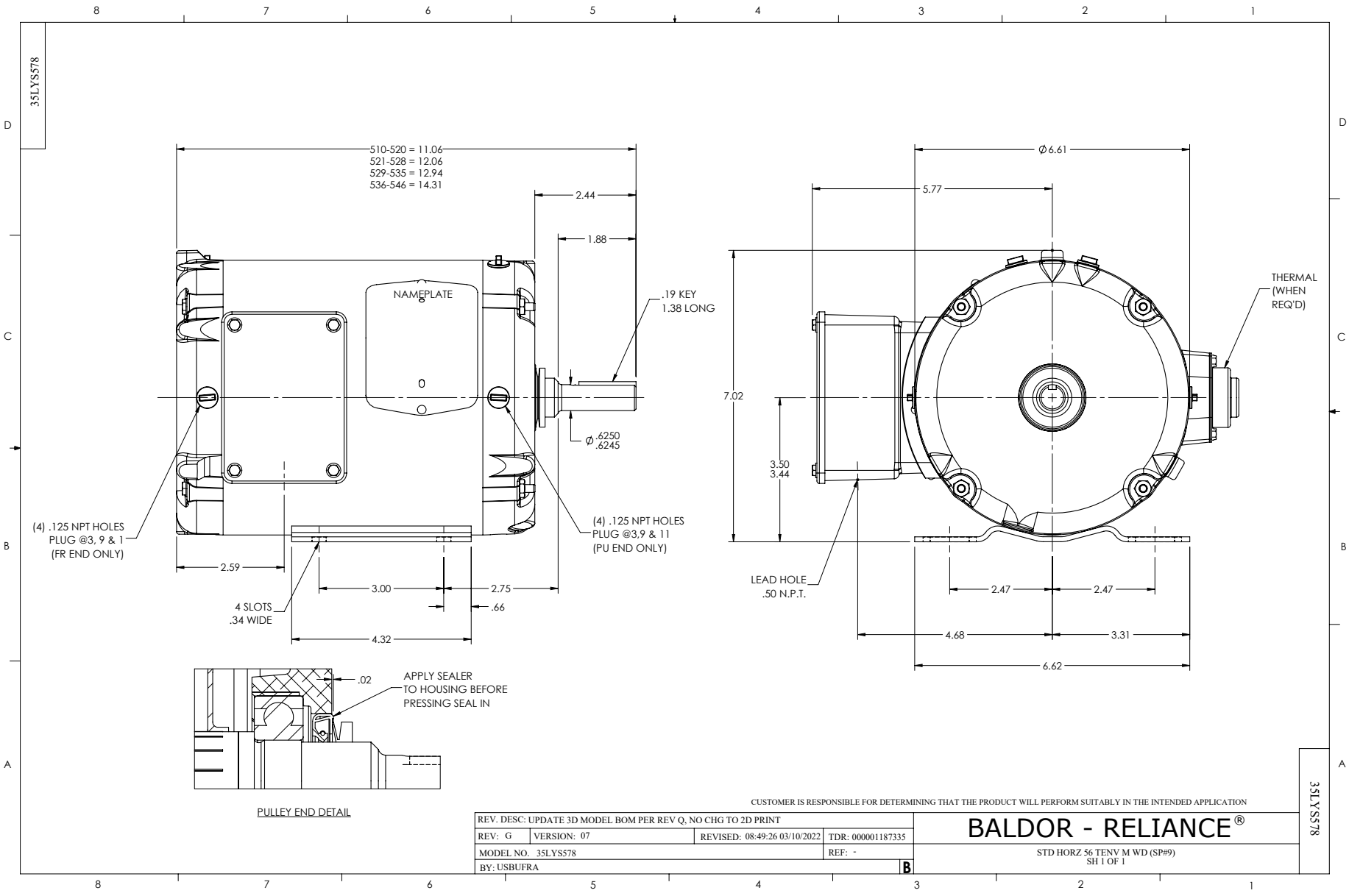
35LYS578
510-520 = 11.06
521-528 = 12.06
529-535 = 12.94
536-546 = 14.31
2.44
1.88
NAMEPLATE
.19 KEY
1.38 LONG
Ø.6250
.6245
(4) .125 NPT HOLES
PLUG @3, 9 & 1
(FR END ONLY)
(4) .125 NPT HOLES
PLUG @3,9 & 11
(PU END ONLY)
2.59
3.00
2.75
.66
4 SLOTS
.34 WIDE
4.32
Ø6.61
5.77
THERMAL
(WHEN
REQ'D)
7.02
3.50
3.44
LEAD HOLE
.50 N.P.T.
2.47
2.47
4.68
3.31
6.62
.02
APPLY SEALER
TO HOUSING BEFORE
PRESSING SEAL IN
PULLEY END DETAIL
CUSTOMER IS RESPONSIBLE FOR DETERMINING THAT THE PRODUCT WILL PERFORM SUITABLY IN THE INTENDED APPLICATION
REV. DESC: UPDATE 3D MODEL BOM PER REV Q, NO CHG TO 2D PRINT
REV: G
VERSION: 07
REVISED: 08:49:26 03/10/2022
TDR: 000001187335
MODEL NO. 35LYS578
REF: -
BY: USBUFRA
B
BALDOR - RELIANCE®
STD HORZ 56 TENV M WD (SP#9)
SH 1 OF 1
35LYS578

CD0005

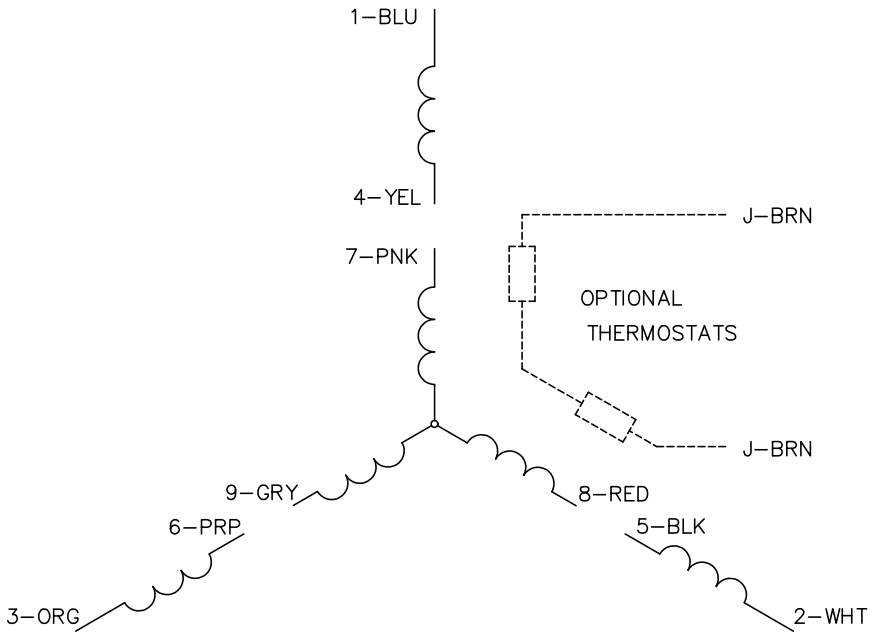


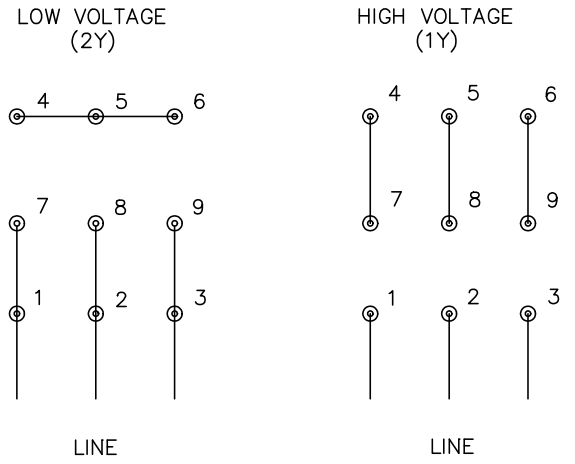


NOTES:

1. INTERCHANGE ANY TWO LINE LEADS TO REVERSE ROTATION.
2. OPTIONAL THERMOSTATS ARE PROVIDED WHEN SPECIFIED.
3. ACTUAL NUMBER OF INTERNAL PARALLEL CIRCUITS MAY BE A MULTIPLE OF THOSE SHOWN ABOVE.
4. LEAD COLORS ARE OPTIONAL. LEADS MUST ALWAYS BE NUMBERED AS SHOWN.

CD0005

| | | | |
|---|---|---|---|
| REV. DESC: REVISE TO SHOW OPTIONAL COLORS | | | BALDOR ELECTRIC Co. |
| REV. LTR: E | BY: JLP | REVISED: 01/19/99 10:15 | TDR: 0171435 |
| CD0005 | | FILE: AAA00005140 | MDL: – |
| | | MTL: – | 3PH, DV, 9 LEADS |