ABB BALDOR RELIANCE

Customer information packet

L3507

.75HP, 1725RPM, 1PH, 60HZ, 56, 3428LC, TEFC, F1
Class - None
Division - Not Applicable

Copyright © All product information within this document is subject to ABB Motors and Mechanical Inc. copyright © protection, unless otherwise noted.
11/5/2026 1:12:16 PM

Specifications

Enclosure	TEFC
Frame	56
Frame Material	Steel
Frequency	60.00 Hz
Haz Area Class and Group	None
Haz Area Division	Not Applicable
Motor Letter Type	Cap Start, Cap Run
Output @ Frequency	.750 HP @ 60 HZ
Phase	1
Synchronous Speed @ Frequency	1800 RPM @ 60 HZ
Voltage @ Frequency	115.0 V @ 60 HZ
	230.0 V @ 60 HZ
Agency Approvals	C UR US
Ambient Temperature	40 °C
Auxiliary Box	NO AUXILLARY BOX
Auxiliary Box Lead Termination	None
Base Indicator	Rigid
Bearing Grease Type	Polyrex EM (-20F +300F)
Blower	None
Current @ Voltage	4.200 A @ 230.0 V
	4.400 A @ 208.0 V
	8.400 A @ 115.0 V
Design Code	N
Drip Cover	No Drip Cover
Duty Rating	CONT
Efficiency @ 100% Load	72.0 %
Electrically Isolated Bearing	Not Electrically Isolated
Feedback Device	NO FEEDBACK
Front Shaft Indicator	None
Heater Indicator	No Heater
High Voltage Full Load Amps	4.2 a
Insulation Class	F

Part Detail

Revision	E
Type	AC
Mech. spec.	34G426
Base	
Status	PRD/A
Elec. spec.	34WGR714
Layout	34LYG426
Eff. date	10-25-2024
CD Diagram	CD0055
Poles	04
Leads	6#18
Proprietary	False
Created date	11-19-2020

Inverter Code	Not Inverter
KVA Code	J
Lifting Lugs	No Lifting Lugs
Locked Bearing Indicator	No Locked Bearing
Motor Lead Quantity/Wire Size	6 @ 18 AWG
Motor Lead Termination	Flying Leads
Motor Standards	NEMA
Motor Type	3428LC
Mounting Arrangement	F1
Number of Poles	4
Overall Length	12.47 IN
Power Factor	78
Product Family	General Purpose
Pulley End Bearing Type	Ball
Pulley Face Code	Standard
Pulley Shaft Indicator	Standard
Rodent Screen	None
RoHS Status	ROHS COMPLIANT
Service Factor	1.25
Shaft Diameter	0.625 IN
Shaft Ground Indicator	No Shaft Grounding
Shaft Rotation	Reversible
Shaft Slinger Indicator	No Slinger
Speed	1725 rpm
Speed Code	Single Speed
Starting Method	Direct on line
Thermal Device - Bearing	None
Thermal Device - Winding	None
Vibration Sensor Indicator	No Vibration Sensor
Winding Thermal 1	None
Winding Thermal 2	None

Nameplate

NP1256L									
CAT.NO.	L3507								
SPEC.	34G426R714								
HP	.75								
VOLTS	115/230								
AMP	8.4/4.2								
RPM	1725								
FRAME	56	**HZ**	60			**PH**	1		
SER.F.	1.25	**CODE**	J	**DES**	N	**CLASS**	F		
NEMA-NOM-EFF	72	**PF**	78						
RATING	40C AMB-CONT								
CC									
DE	6203	**ODE**	6203						
ENCL	TEFC	**SN**							
	SFA 10/5								

Accessories

Part number	Description	Multiplier
34-171	C FACE KIT	A8

AC Induction Motor Performance Data
Record # 85524
Typical performance - not guaranteed values

Winding: 34WGR714-R001	**Type:** 3428LC	**Enclosure:** TEFC

Nameplate Data				**230 V, 60 Hz: High Voltage Connection**	
Rated Output (HP)			.75	**Full Load Torque**	2.25 LB-FT
Volts			115/230	**Start Configuration**	direct on line
Full Load Amps			8.4/4.2	**Breakdown Torque**	5.4 LB-FT
R.P.M.			1725	**Pull-up Torque**	5.1 LB-FT
Hz	60	**Phase**	1	**Locked-rotor Torque**	7.04 LB-FT
NEMA Design Code	N	**KVA Code**	J	**Starting Current**	24.54 A
Service Factor (S.F.)			1.25	**No-load Current**	2.39 A
NEMA Nom. Eff.	72	**Power Factor**	78	**Line-line Res. @ 25ºC**	0.726 Ω A Ph 3.03 Ω B Ph
Rating - Duty			40C AMB-CONT	**Temp. Rise @ Rated Load**	66°C
S.F. Amps			10/5	**Temp. Rise @ S.F. Load**	84°C
				Locked-rotor Power Factor	83
				Rotor inertia	0.0665 lb-ft²

Load Characteristics 230 V, 60 Hz, 0.75 HP

% of Rated Load	**25**	**50**	**75**	**100**	**125**	**150**	**S.F.**
Power Factor	46	62	73	80	83	83	83
Efficiency	52.6	68.4	72.5	73.5	73	69.2	73
Speed	1780	1765	1747	1727	1704	1670	1704
Line amperes	2.54	2.9	3.45	4.09	4.92	6.06	4.92

ABB Motors and Mechanical Inc.

WINDING # 34WGR714

0.75 HP 1 PH 60 HZ 1725 RPM 230 V 3428LC

Typical performance - not guaranteed values.

TORQUES(LB-FT): PO=5.4 PU=5.1 LR=7.04 LRA=24.54

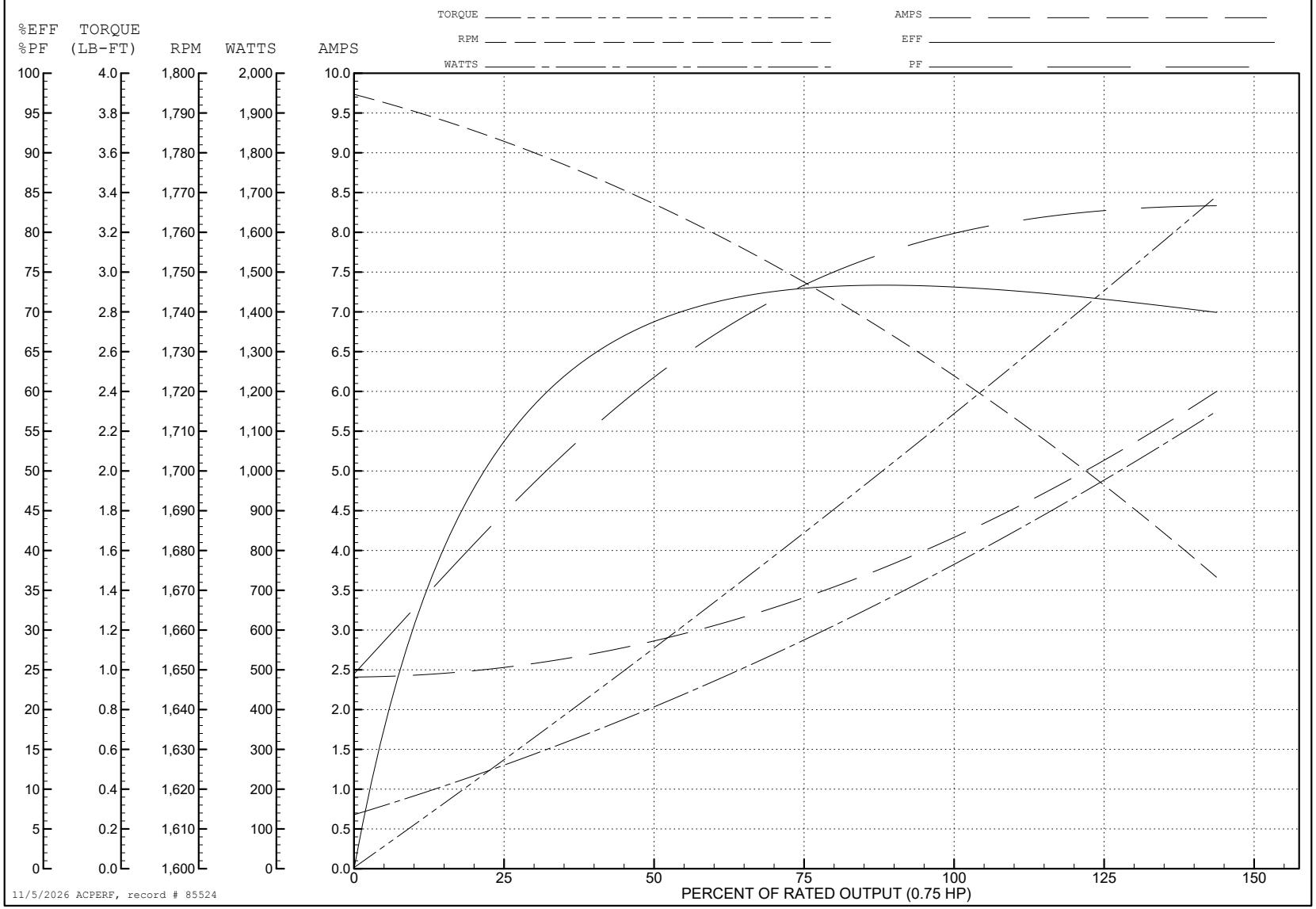

11/5/2026 ACPERF, record # 85524

AC Induction Motor Performance Data
Record # 85532
Typical performance - not guaranteed values

Winding: 34WGR714-R001	**Type:** 3428LC	**Enclosure:** TEFC

Nameplate Data				**115 V, 60 Hz: Low Voltage Connection**	
Rated Output (HP)			.75	**Full Load Torque**	2.26 LB-FT
Volts			115/230	**Start Configuration**	direct on line
Full Load Amps			8.4/4.2	**Breakdown Torque**	5.41 LB-FT
R.P.M.			1725	**Pull-up Torque**	5.31 LB-FT
Hz	60	**Phase**	1	**Locked-rotor Torque**	7.32 LB-FT
NEMA Design Code	N	**KVA Code**	J	**Starting Current**	47.96 A
Service Factor (S.F.)			1.25	**No-load Current**	4.78 A
NEMA Nom. Eff.	72	**Power Factor**	78	**Line-line Res. @ 25ºC**	0.726 Ω A Ph 3.03 Ω B Ph
Rating - Duty			40C AMB-CONT	**Temp. Rise @ Rated Load**	66°C
S.F. Amps			10/5	**Temp. Rise @ S.F. Load**	82°C
				Locked-rotor Power Factor	85.8
				Rotor inertia	0.0665 lb-ft²

Load Characteristics 115 V, 60 Hz, 0.75 HP

% of Rated Load	**25**	**50**	**75**	**100**	**125**	**150**	**S.F.**
Power Factor	46	62	73	80	83	84	83
Efficiency	52.7	68.4	72.5	73.6	72.8	69	72.8
Speed	1780	1765	1747	1726	1703	1670	1703
Line amperes	5.07	5.78	6.88	8.16	9.82	12.09	9.82

ABB Motors and Mechanical Inc.

WINDING # 34WGR714

0.75 HP 1 PH 60 HZ 1725 RPM 115 V 3428LC

Typical performance - not guaranteed values.

TORQUES(LB-FT): PO=5.41 PU=5.31 LR=7.32 LRA=47.96

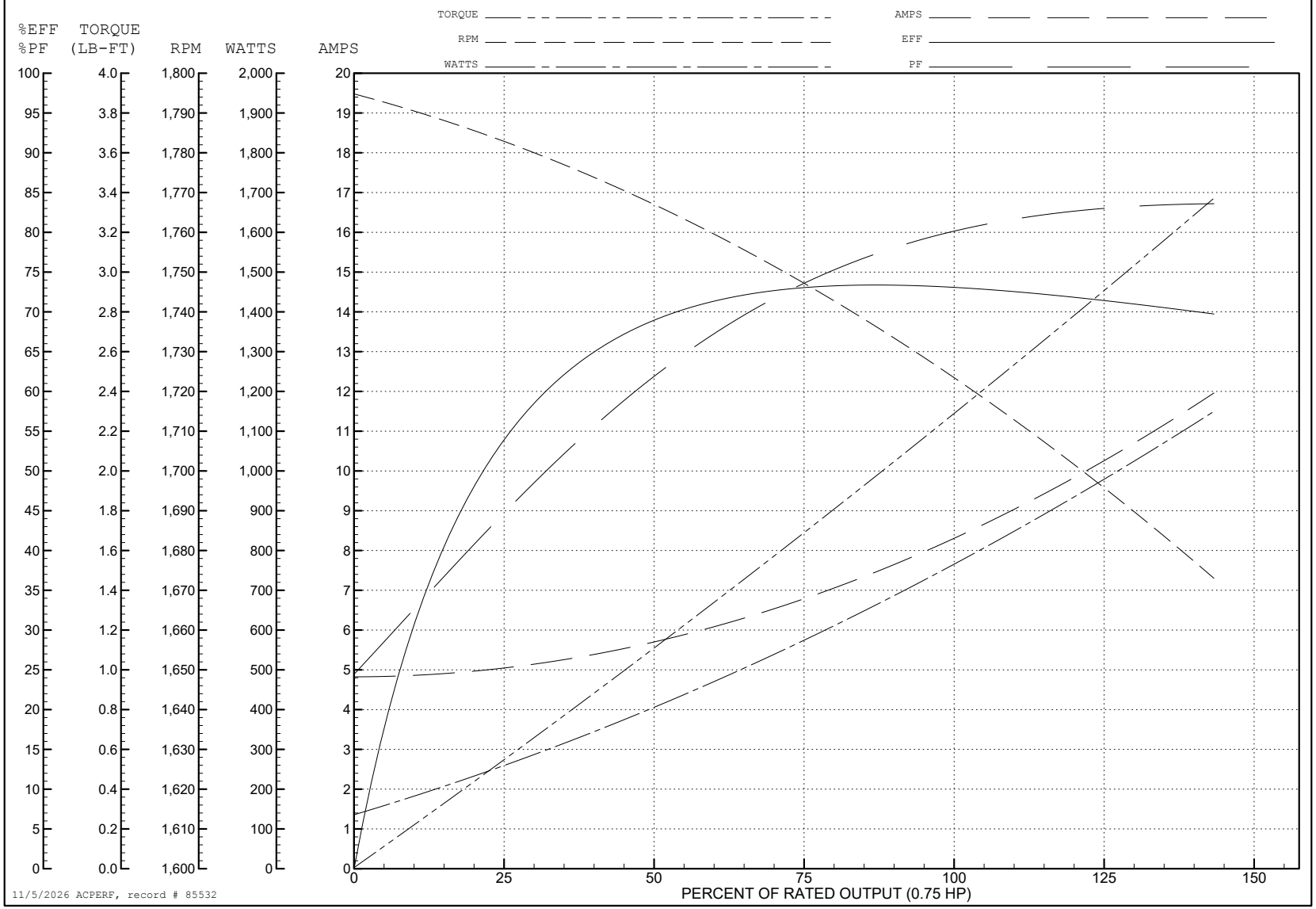

34LYG426

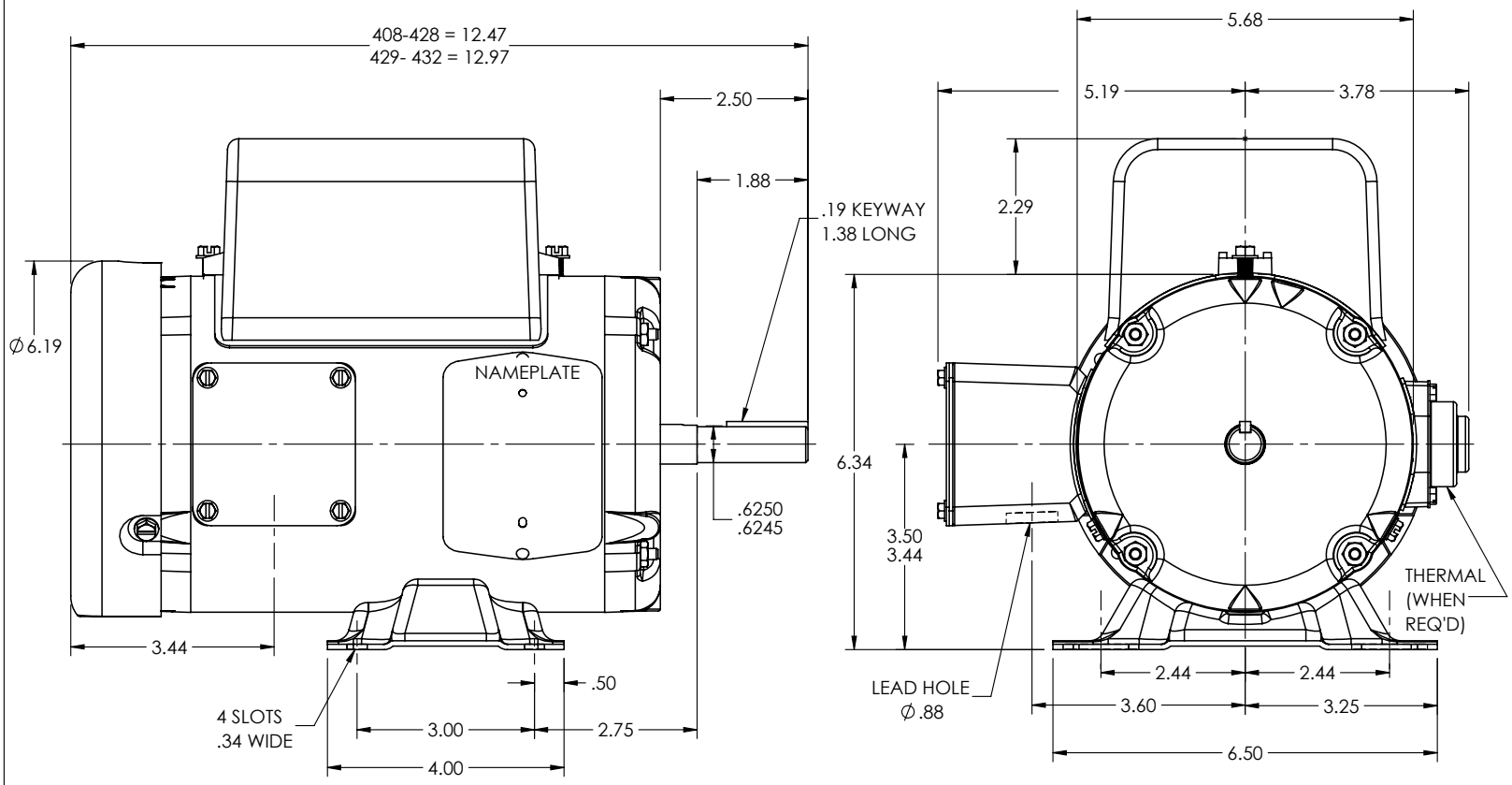

34LYG426

CUSTOMER IS RESPONSIBLE FOR DETERMINING THAT THE PRODUCT WILL PERFORM SUITABLY IN THE INTENDED APPLICATION

REV. DESC: LOAD TO SOLIDWORKS			
REV: C	VERSION: 02	REVISED: 04:08:09 08/09/2022	TDR: 000001194274
34LYG426	MODEL NO. 34LYG426		REF: -
	BY: ENFRAJ0		

BALDOR - RELIANCE®

SPL HORZ 34LC NEMA 56 TEFC

CD0055

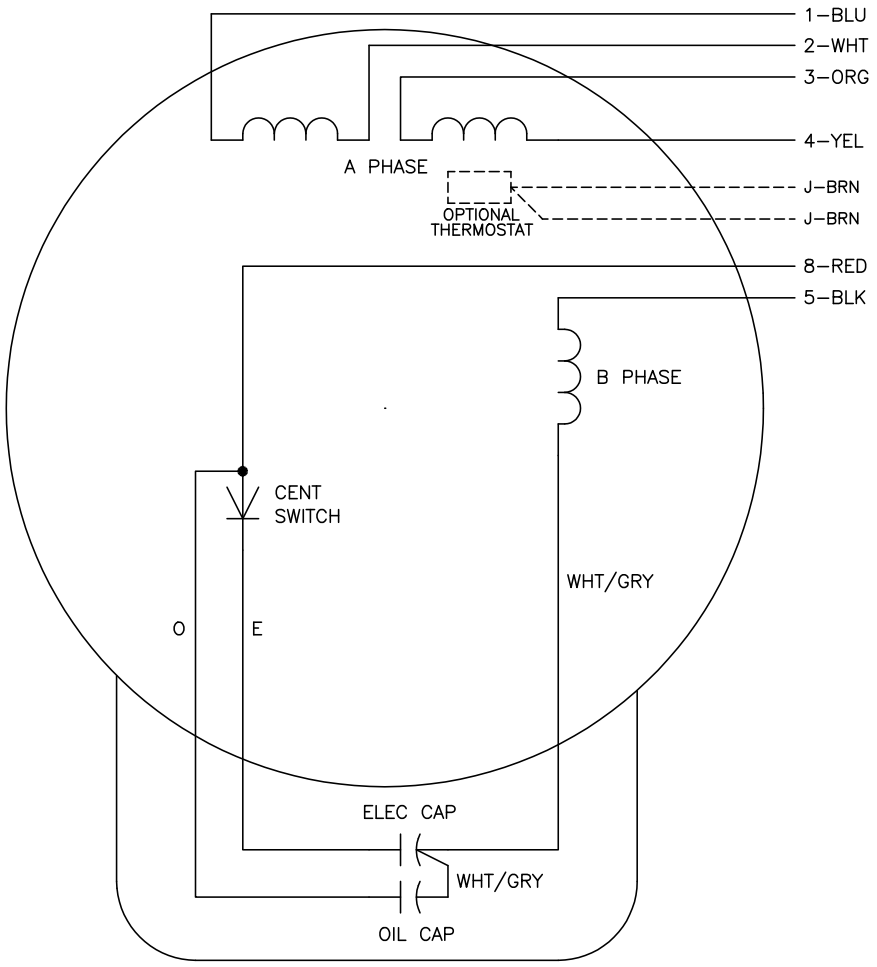

	LINE A	LINE B	JOIN
HIGH STD	1	4,5	2,3,8
HIGH OPP	1	4,8	2,3,5
LOW STD	1,3,8	2,4,5	–
LOW OPP	1,3,5	2,4,8	–

NOTES:

1. STANDARD ROTATION IS CCW FACING END OPPOSITE SHAFT EXTENSION.
2. OPTIONAL THERMOSTAT IS PROVIDED WHEN SPECIFIED.
3. MULTIPLE CAPACITORS ARE CONNECTED IN PARALLEL UNLESS OTHERWISE SPECIFIED.
4. LEAD COLORS ARE OPTIONAL. LEADS MUST ALWAYS BE NUMBERED AS SHOWN.

REV. DESC: REVISE TO SHOW OPTIONAL COLORS			BALDOR ELECTRIC Co.
REV. LTR: D	BY: JLP	REVISED: 04/08/99 1:17	TDR: 0178636
CD0055		FILE: AAA00007414	MDL: –
		MTL: –	TYPE LC, DV, REV, 6 LEADS

CD0055