ABB BALDOR RELIANCE

Customer information packet

M3543T-5

.75HP, 1140RPM, 3PH, 60HZ, 143T, 3428M, TEFC
Class - None
Division - Not Applicable

Copyright © All product information within this document is subject to ABB Motors and Mechanical Inc. copyright © protection, unless otherwise noted.
11/5/2026 9:54:35 AM

Specifications

Enclosure	TEFC
Frame	143T
Frame Material	Steel
Frequency	60.00 Hz
Haz Area Class and Group	None
Haz Area Division	Not Applicable
Motor Letter Type	Three Phase
Output @ Frequency	.750 HP @ 60 HZ
Phase	3
Synchronous Speed @ Frequency	1200 RPM @ 60 HZ
Voltage @ Frequency	575.0 V @ 60 HZ
Agency Approvals	CURUS
	C UR US
Ambient Temperature	40 °C
Auxiliary Box	NO AUXILLARY BOX
Auxiliary Box Lead Termination	None
Base Indicator	Rigid
Bearing Grease Type	Polyrex EM (-20F +300F)
Blower	None
Current @ Voltage	1.200 A @ 575.0 V
Design Code	B
Drip Cover	No Drip Cover
Duty Rating	CONT
Efficiency @ 100% Load	77.0 %
Electrically Isolated Bearing	Not Electrically Isolated
Feedback Device	NO FEEDBACK
Front Face Code	Standard
Front Shaft Indicator	None
Heater Indicator	No Heater
High Voltage Full Load Amps	1.2 a
Insulation Class	B
Inverter Code	Not Inverter

Part Detail

Revision	V
Type	AC
Mech. spec.	34-3484
Base	
Status	PRD/A
Elec. spec.	34WGW415
Layout	34LY3484
Eff. date	11-06-2024
CD Diagram	CD0006
Poles	06
Leads	3#18
Proprietary	False
Created date	01-01-0001

KVA Code	K
Lifting Lugs	No Lifting Lugs
Locked Bearing Indicator	No Locked Bearing
Motor Lead Exit	Ko Box
Motor Lead Quantity/Wire Size	3 @ 18 AWG
Motor Lead Termination	Flying Leads
Motor Standards	NEMA
Motor Type	3428M
Mounting Arrangement	F1
Number of Poles	6
Overall Length	13.41 IN
Power Factor	59
Product Family	General Purpose
Pulley End Bearing Type	Ball
Pulley Face Code	Standard
Pulley Shaft Indicator	Standard
Rodent Screen	None
Service Factor	1.15
Shaft Diameter	0.875 IN
Shaft Extension Location	Pulley End
Shaft Ground Indicator	No Shaft Grounding
Shaft Rotation	Reversible
Shaft Slinger Indicator	No Slinger
Speed	1140 rpm
Speed Code	Single Speed
Starting Method	Direct on line
Thermal Device - Bearing	None
Thermal Device - Winding	None
Vibration Sensor Indicator	No Vibration Sensor
Winding Thermal 1	None
Winding Thermal 2	None

Nameplate

NP1256L									
CAT.NO.	M3543T-5								
SPEC.	34-3484W415								
HP	.75								
VOLTS	575								
AMP	1.2								
RPM	1140								
FRAME	143T	**HZ**	60			**PH**	3		
SER.F.	1.15	**CODE**	K	**DES**	B	**CLASS**	B		
NEMA-NOM-EFF	77	**PF**	59						
RATING	40C AMB-CONT								
CC									
DE	6205	**ODE**	6203						
ENCL	TEFC	**SN**							
	SFA 1.3								

Accessories

Part number	Description	Multiplier
34-3903T	C FACE KIT	A8

AC Induction Motor Performance Data
Record # 6974
Typical performance - not guaranteed values

Winding: 34WGW415-R001	**Type:** 3428M	**Enclosure:** TEFC

Nameplate Data				**575 V, 60 Hz: Single Voltage Motor**	
Rated Output (HP)			.75	**Full Load Torque**	3.4 LB-FT
Volts			575	**Start Configuration**	direct on line
Full Load Amps			1.2	**Breakdown Torque**	11.8 LB-FT
R.P.M.			1140	**Pull-up Torque**	9.3 LB-FT
Hz	60	**Phase**	3	**Locked-rotor Torque**	9.7 LB-FT
NEMA Design Code	B	**KVA Code**	K	**Starting Current**	5.9 A
Service Factor (S.F.)			1.15	**No-load Current**	0.88 A
NEMA Nom. Eff.	77	**Power Factor**	59	**Line-line Res. @ 25ºC**	34.5 Ω
Rating - Duty			40C AMB-CONT	**Temp. Rise @ Rated Load**	50°C
S.F. Amps			1.3	**Temp. Rise @ S.F. Load**	61°C

Load Characteristics 575 V, 60 Hz, 0.75 HP

% of Rated Load	**25**	**50**	**75**	**100**	**125**	**150**	**S.F.**
Power Factor	26	40	51	59	65	68	63
Efficiency	60	72	76	77	75	73	76
Speed	1185	1170	1155	1135	1115	1095	1125
Line amperes	0.88	0.96	1.12	1.2	1.36	1.6	1.3

ABB Motors and Mechanical Inc.

WINDING # 34WGW415

0.75 HP 3 PH 60 HZ 1140 RPM 575 V 3428M

Typical performance - not guaranteed values.

TORQUES(LB-FT): PO=11.8 PU=9.3 LR=9.7 LRA=5.9

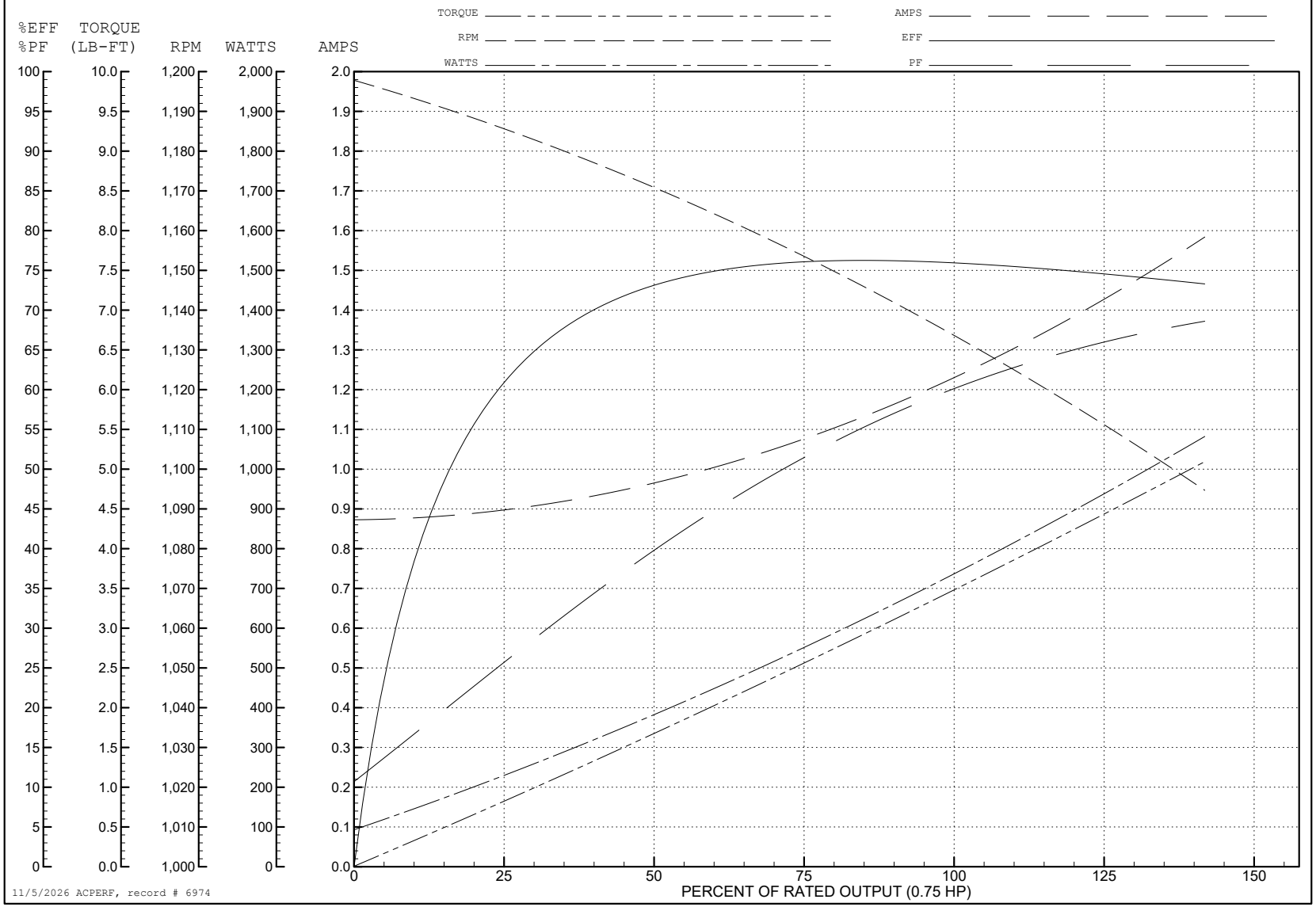

34LY3484

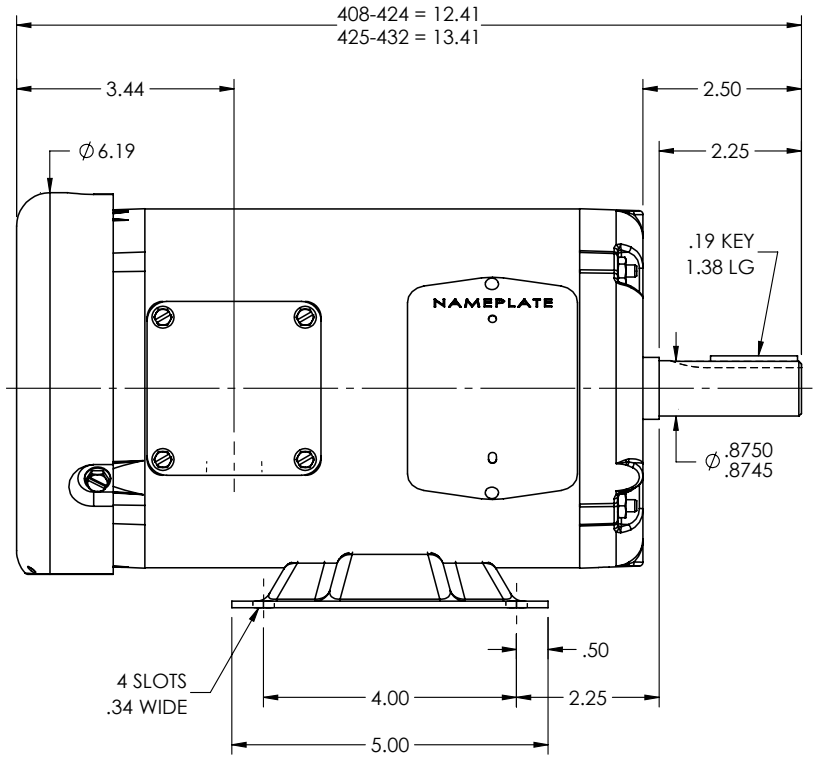

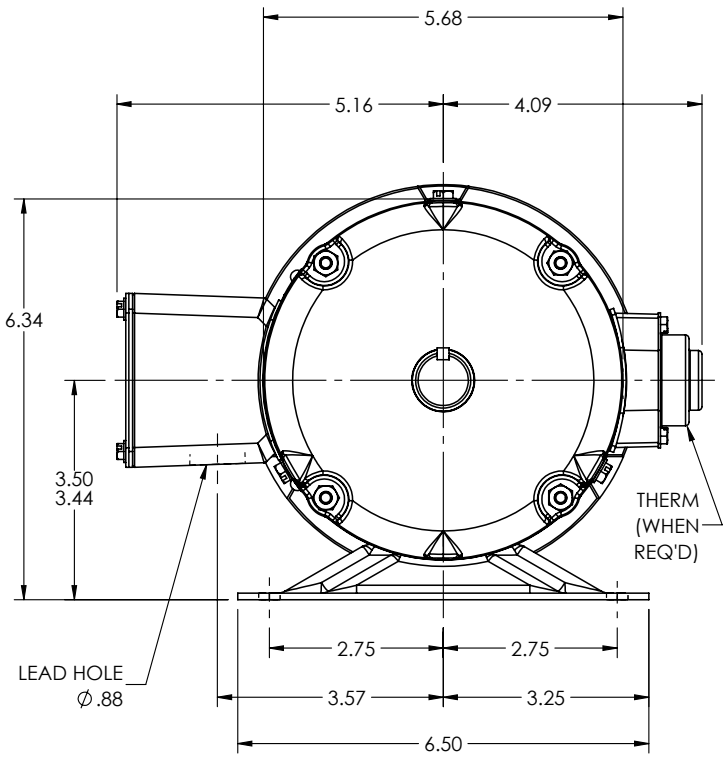

CUSTOMER IS RESPONSIBLE FOR DETERMINING THAT THE PRODUCT WILL PERFORM SUITABLY IN THE INTENDED APPLICATION

REV. DESC: CLEAN UP DIMENSIONING			
REV: H	VERSION: 03	REVISED: 09:27:32 08/13/2026	TDR: 000001282764
34LY3484	MODEL NO. 34LY3484		REF: -
	BY: ENJEFD0		

BALDOR - RELIANCE®

STD HORZ MODEL 34M NEMA 143T TEFC

34LY3484

CD0006

TYPICAL WYE–CONNECTED MOTOR

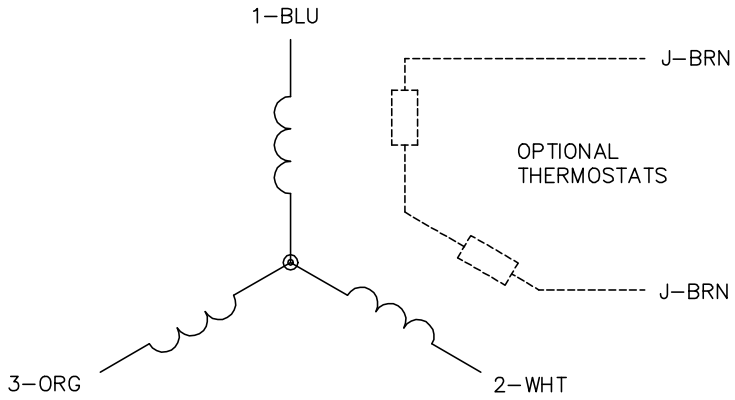

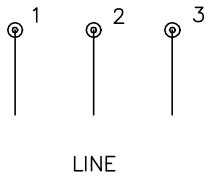

TYPICAL DELTA–CONNECTED MOTOR

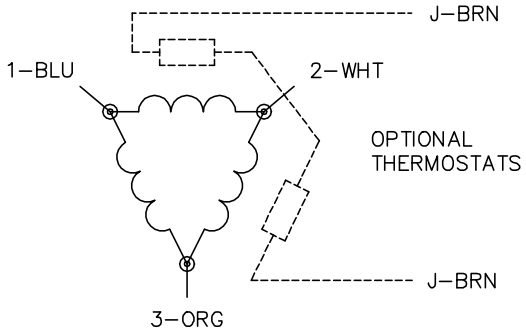

NOTES:

1. THREE LEAD MOTOR MAY BE EITHER WYE CONNECTED OR DELTA CONNECTED.
2. INTERCHANGE ANY TWO LINE LEADS TO REVERSE ROTATION.
3. OPTIONAL THERMOSTATS ARE PROVIDED WHEN SPECIFIED.
4. ACTUAL NUMBER OF INTERNAL PARALLEL CIRCUITS MAY VARY.
5. LEAD COLORS ARE OPTIONAL. LEADS MUST BE NUMBERED AS SHOWN.

CD0006

REV. DESC: ADD CLASS CONN00000007			BALDOR - RELIANCE®
REV. LTR: E	VERSION: 01	TDR: 000001099922	
FILE: \AAA\00005\141	REVISED: 10:24:49 02/19/2019	BY: ENBRIR0	3PH, SV, 3 LEADS, WYE OR DELTA CONNECTED
MTL: –			SH 1 of 1