ABB BALDOR RELIANCE

Customer information packet

ZDM3584T-5

1.5HP, 1770RPM, 3PH, 60HZ, 145TC, 0522M, TEBC
Class - None
Division - Not Applicable

Copyright © All product information within this document is subject to ABB Motors and Mechanical Inc. copyright © protection, unless otherwise noted.
11/5/2026 9:22:40 AM

Specifications

Enclosure	TEBC
Frame	145TC
Frame Material	Iron
Frequency	60.00 Hz
Haz Area Class and Group	None
Haz Area Division	Not Applicable
Motor Letter Type	Three Phase
Output @ Frequency	1.500 HP @ 60 HZ
Phase	3
Synchronous Speed @ Frequency	1800 RPM @ 60 HZ
Voltage @ Frequency	575.0 V @ 60 HZ
Agency Approvals	UR
	CSA
Ambient Temperature	40 °C
Auxiliary Box	NO AUXILLARY BOX
Auxiliary Box Lead Termination	None
Base Indicator	Rigid
Bearing Grease Type	Polyrex EM (-20F +300F)
Blower	BLOWER
Current @ Voltage	1.710 A @ 575.0 V
Design Code	B
Drip Cover	No Drip Cover
Duty Rating	CONT
Efficiency @ 100% Load	86.5 %
Electrically Isolated Bearing	Not Electrically Isolated
Feedback Device	ENCODER
Front Shaft Indicator	None
Heater Indicator	No Heater
High Voltage Full Load Amps	1.7 a
Insulation Class	F
Inverter Code	Inverter Ready
KVA Code	L

Part Detail

Revision	C
Type	AC
Mech. spec.	05E535
Base	
Status	PRD/A
Elec. spec.	05WGX559
Layout	05LYE535
Eff. date	09-30-2025
CD Diagram	CD0006
Poles	04
Leads	3#18
Proprietary	False
Created date	02-23-2023

Lifting Lugs	Standard Lifting Lugs
Locked Bearing Indicator	Locked Bearing
Max Speed	2700 rpm
Motor Lead Quantity/Wire Size	3 @ 18 AWG
Motor Lead Termination	Flying Leads
Motor Standards	NEMA
Motor Type	0522M
Mounting Arrangement	F1
Number of Poles	4
Overall Length	19.08 IN
Power Factor	76
Product Family	General Purpose
Pulley End Bearing Type	Ball
Pulley Face Code	C-Face
Pulley Shaft Indicator	Standard
Rodent Screen	None
RoHS Status	ROHS NON-COMPLIANT
Service Factor	1.00
Shaft Diameter	0.875 IN
Shaft Ground Indicator	No Shaft Grounding
Shaft Rotation	Reversible
Shaft Slinger Indicator	Shaft Slinger
Speed	1770 rpm
Speed Code	Single Speed
Starting Method	Direct on line
Thermal Device - Bearing	None
Thermal Device - Winding	Normally Closed Thermostat
Vibration Sensor Indicator	No Vibration Sensor
Winding Thermal 1	None
Winding Thermal 2	None

Nameplate

NP4539L									
CAT.NO.	ZDM3584T-5								
SPEC.	05E535X559Z1								
FRAME	145TC			**H.P.**	1.5 TE				
VOLTS	575								
MAG. CUR.	1.05					**F.L. AMPS**	1.71		
R.P.M.	1770			**R.P.M. MAX**	2700				
HZ.	60	**PH.**	3	**CLASS**	F				
SER.F.	1.00	**DES.**	B	**SL HZ**	1				
NEMA NOM. EFF.	86.5	**WK2**	0.159						
BLWR V	115	**PH**	1	**HZ**	60	**AMPS**	.5		
RATING	40C AMB-CONT								
DE	6205	**ODE**	6203						
CC	010A	**SN**							
	1000:1 CT/VT								

AC Induction Motor Performance Data
Record # 82042
Typical performance - not guaranteed values

Winding: 05WGX559-R002	**Type:** 0522M	**Enclosure:** TEFC

Nameplate Data				**575 V, 60 Hz: Single Voltage Motor**	
Rated Output (HP)			1.5	**Full Load Torque**	4.46 LB-FT
Volts			575	**Start Configuration**	direct on line
Full Load Amps			1.71	**Breakdown Torque**	16.69 LB-FT
R.P.M.			1768	**Pull-up Torque**	9.8 LB-FT
Hz	60	**Phase**	3	**Locked-rotor Torque**	11.36 LB-FT
NEMA Design Code	B	**KVA Code**	L	**Starting Current**	14.18 A
Service Factor (S.F.)			1	**No-load Current**	1.05 A
NEMA Nom. Eff.	86.5	**Power Factor**	76	**Line-line Res. @ 25ºC**	22 Ω
Rating - Duty			40C AMB-CONT	**Temp. Rise @ Rated Load**	34°C
				Locked-rotor Power Factor	62
				Rotor inertia	0.159 lb-ft²

Load Characteristics 575 V, 60 Hz, 1.5 HP

% of Rated Load	**25**	**50**	**75**	**100**	**125**	**150**
Power Factor	35	54	67	76	81	84
Efficiency	75.8	83.9	86.1	86.4	85.5	84.2
Speed	1791	1784	1776	1768	1758	1748
Line amperes	1.1	1.24	1.45	1.72	2.03	2.38

ABB Motors and Mechanical Inc.

WINDING # 05WGX559

1.5 HP 3 PH 60 HZ 1768 RPM 575 V 0522M

Typical performance - not guaranteed values.

TORQUES(LB-FT): PO=16.69 PU=9.8 LR=11.36 LRA=14.18

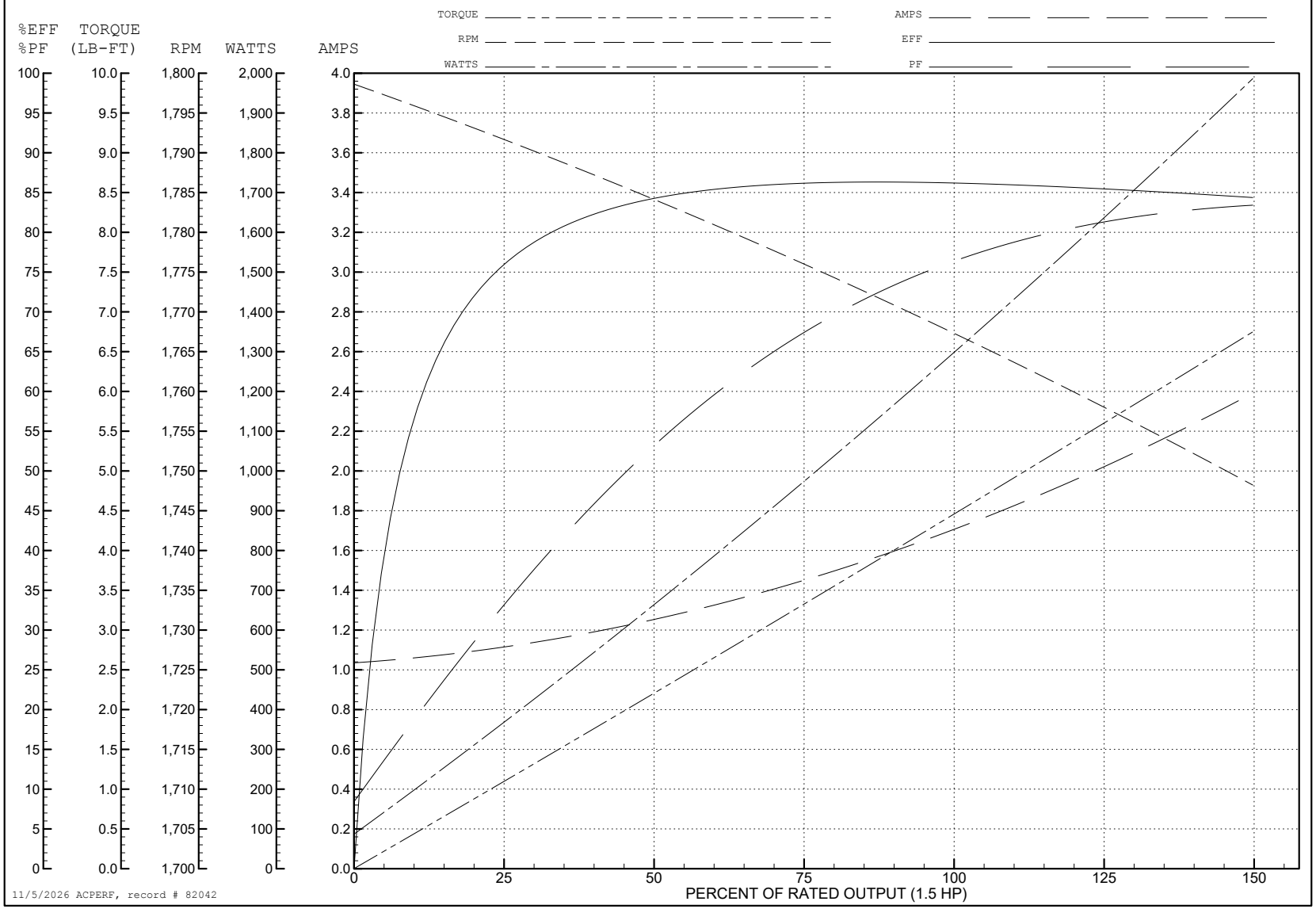

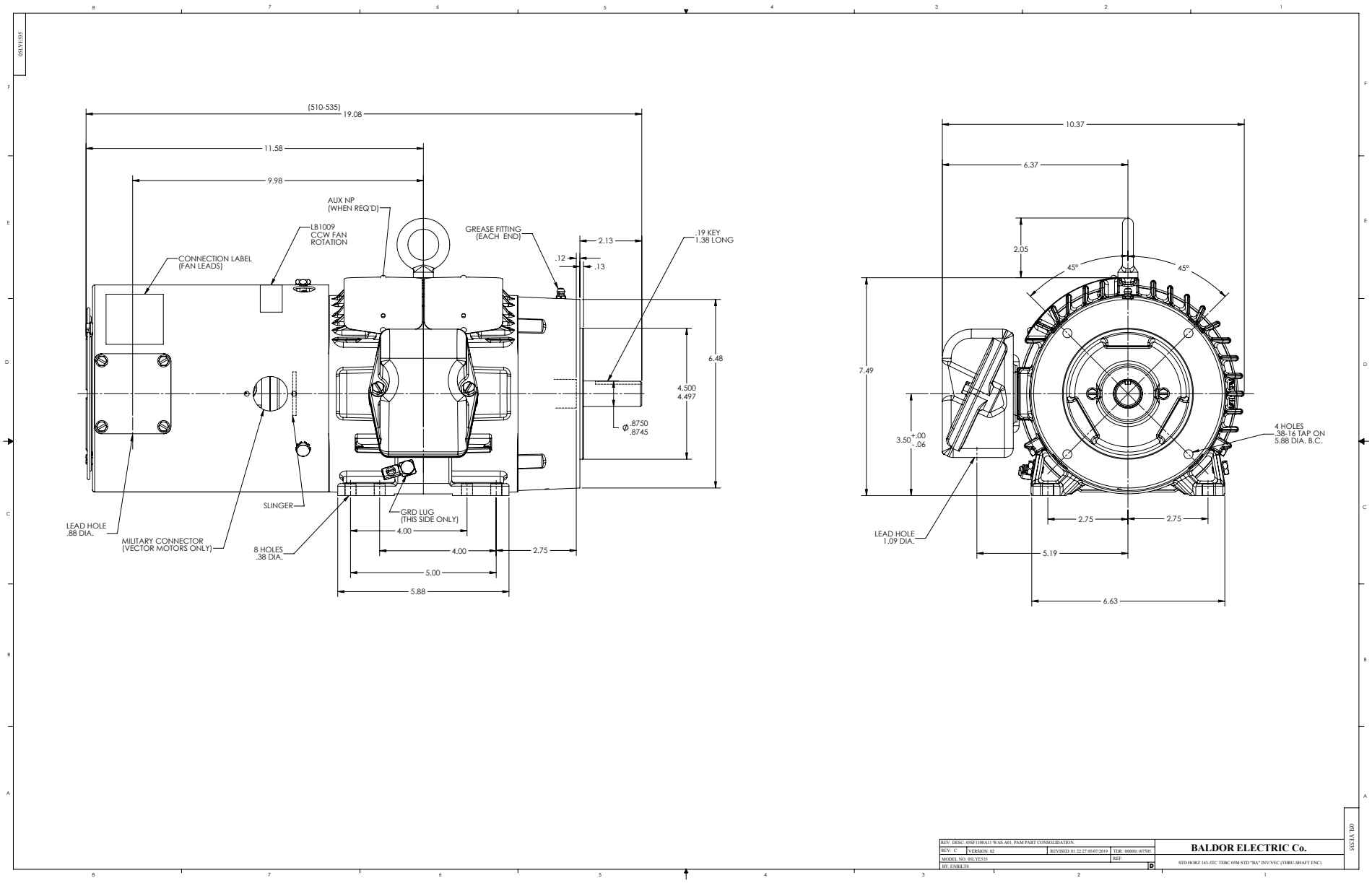
(510-535)
19.08
11.58
9.98
AUX NP
(WHEN REQ'D)
LB1009
CCW FAN
ROTATION
CONNECTION LABEL
(FAN LEADS)
GREASE FITTING
(EACH END)
2.13
.12
.13
.19 KEY
1.38 LONG
6.48
4.500
4.497
Ø .8750
.8745
SLINGER
GRD LUG
(THIS SIDE ONLY)
LEAD HOLE
.88 DIA.
MILITARY CONNECTOR
(VECTOR MOTORS ONLY)
8 HOLES
.38 DIA.
4.00
4.00
2.75
5.00
5.88
10.37
6.37
2.05
45°
45°
7.49
3.50 +.00 -.06
4 HOLES
.38-16 TAP ON
5.88 DIA. B.C.
LEAD HOLE
1.09 DIA.
2.75
2.75
5.19
6.63
REV: DESC: 05SF1100A11 WAS A01, PAM PART CONSOLIDATION.
REV: C
VERSION: 02
REVISED: 01.22.27 05/07/2019
TDR: 00000110750S
MODEL NO: 05LYE535
REF:
BY: ENBILT0
D
BALDOR ELECTRIC Co.
STD HORZ 143-5TC TEBC 05M STD "BA" INV/VEC (THRU-SHAFT ENC)
05LYE535

CD0006

TYPICAL WYE–CONNECTED MOTOR

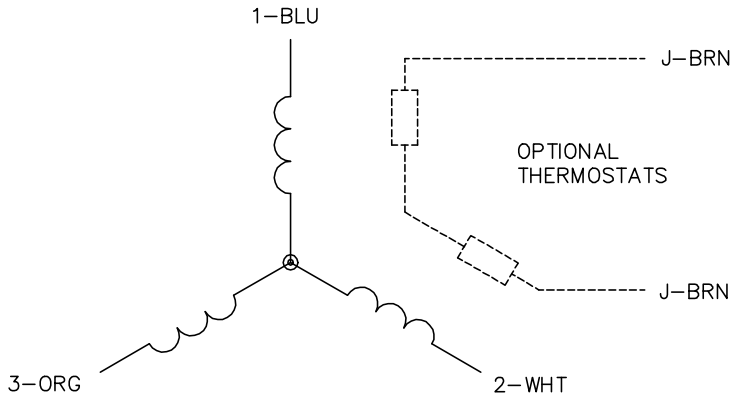

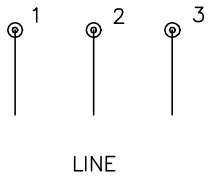

TYPICAL DELTA–CONNECTED MOTOR

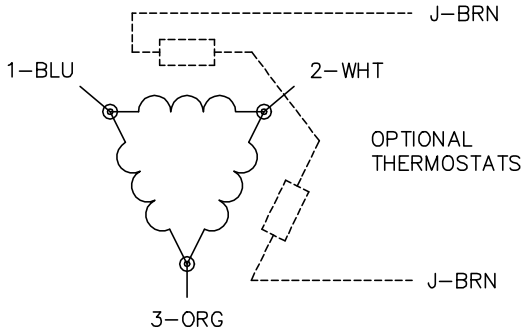

NOTES:

1. THREE LEAD MOTOR MAY BE EITHER WYE CONNECTED OR DELTA CONNECTED.
2. INTERCHANGE ANY TWO LINE LEADS TO REVERSE ROTATION.
3. OPTIONAL THERMOSTATS ARE PROVIDED WHEN SPECIFIED.
4. ACTUAL NUMBER OF INTERNAL PARALLEL CIRCUITS MAY VARY.
5. LEAD COLORS ARE OPTIONAL. LEADS MUST BE NUMBERED AS SHOWN.

CD0006

REV. DESC: ADD CLASS CONN00000007		
REV. LTR: E	VERSION: 01	TDR: 000001099922
FILE: \AAA\00005\141	REVISED: 10:24:49 02/19/2019	BY: ENBRIR0
MTL: –		

BALDOR - RELIANCE®

3PH, SV, 3 LEADS, WYE OR DELTA CONNECTED

SH 1 of 1