35LYX095

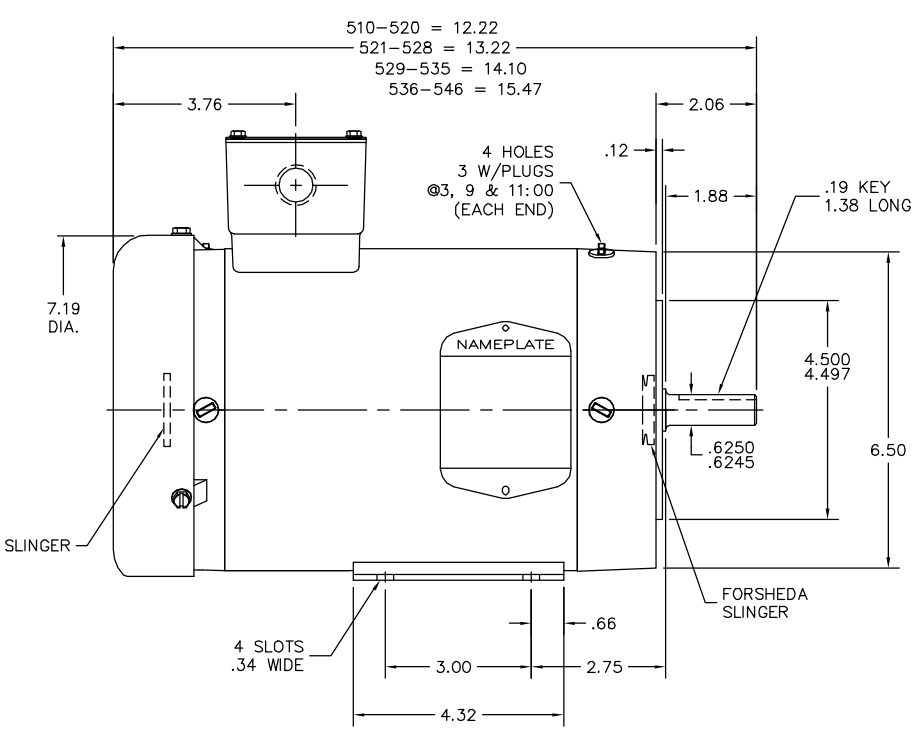

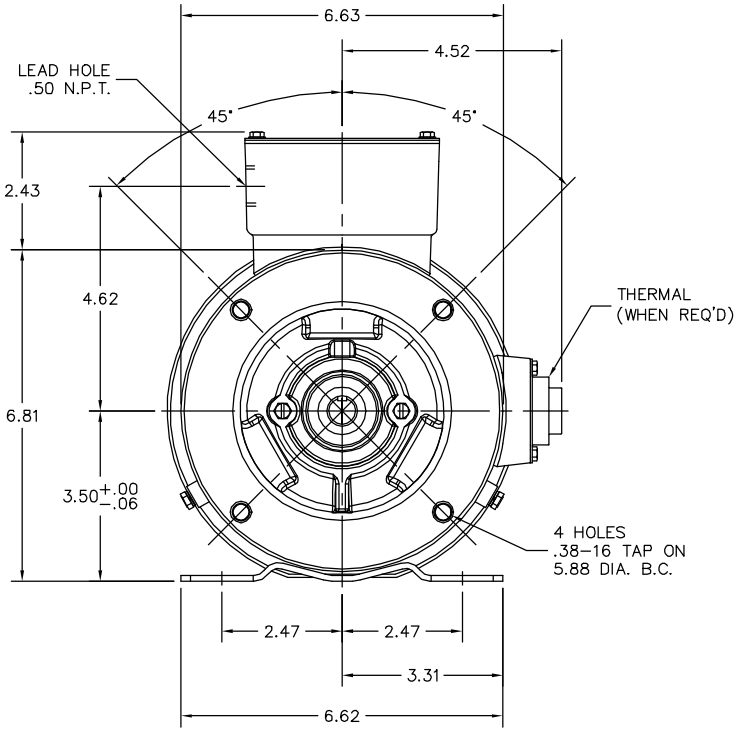

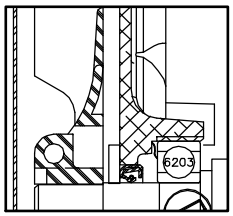

FRONT END DETAIL

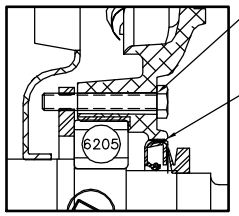

PULLEY END DETAIL

APPLY COAT OF SEALER
UNDER RETAINER RING
SCREW HEADS

APPLY COAT OF SEALER TO
HOUSING BEFORE PRESSING
IN SEALS ON EACH END

CUSTOMER IS RESPONSIBLE FOR DETERMINING THAT BALDOR'S PRODUCT WILL PERFORM SUITABLY IN THE INTENDED APPLICATION.

REV. DESC: UPDATE ENDPLATES AND NOTES		
REV. LTR: B	VERSION: 02	TDR: 000001073391
FILE: \AAA\00153\080	REVISED: 11:16:57 06/04/2018	BY: FPJEFGO
MTL: –		

BALDOR - RELIANCE®

HOR 56C TEFC M WD F3 W/SEALS EA END, W/35BA4010 (2 POLE)

SH 1 of 1

35LYX095