marathon®

General Purpose Motors

Model No: 131636.00
Catalog No: 131636.00

General Purpose Motor, 3 HP, 1 Ph, 60 Hz, 115/208-230 V, 3600 RPM, 182T Frame, DP

©2026 Marathon, All Rights Reserved.

marathon®

Product Information Packet: Model No: 131636.00, Catalog No: 131636.00 General Purpose Motor, 3 HP, 1 Ph, 60 Hz, 115/208-230 V, 3600 RPM, 182T Frame, DP

Nameplate Specifications

Phase	**1**	Output HP	**3 Hp**
Output KW	**2.2 kW**	Voltage	**115/208-230 V**
Speed	**3520 r/min**	Synchronous RPM	**3600 r/min**
Service Factor	**1.15**	Frame	**182T**
Enclosure	**Drip Proof**	Thermal Protection	**No Protection**
Efficiency	**77.1 %**	Ambient Temperature	**40 °C**
Frequency	**60 Hz**	Current	**28.3/15.4-14.2 A**
Power Factor	**89.7**	Duty	**Continuous**
Insulation Class	**F**	Design Code	**L**
KVA Code	**G**	Drive End Bearing Size	**6206**
Opp Drive End Bearing Size	**6205**	UL	**Recognized**
CSA	**Y**	CE	**N**
IP Code	**22**	Number of Speeds	**1**

Technical Specifications

Electrical Type	**Capacitor Start Capacitor Run**	Starting Method	**Across The Line**
Poles	**2**	Rotation	**Reversible**
Resistance Main	**.187 O**	Mounting	**Rigid Base**
Motor Orientation	**Horizontal**	Drive End Bearing	**Ball**
Opp Drive End Bearing	**Ball**	Frame Material	**Rolled Steel**
Shaft Type	**T**	Overall Length	**14.19 in**
Frame Length	**10.0 in**	Shaft Diameter	**1 1/8 in**
Shaft Extension	**2.75 in**	Assembly/Box Mounting	**F1 Only**

Drawings

Connection Drawing	**005054.01**	Outline Drawing	**035370-1000**

This is an uncontrolled document once printed or downloaded and is subject to change without notice. Date Created: 13/10/2026

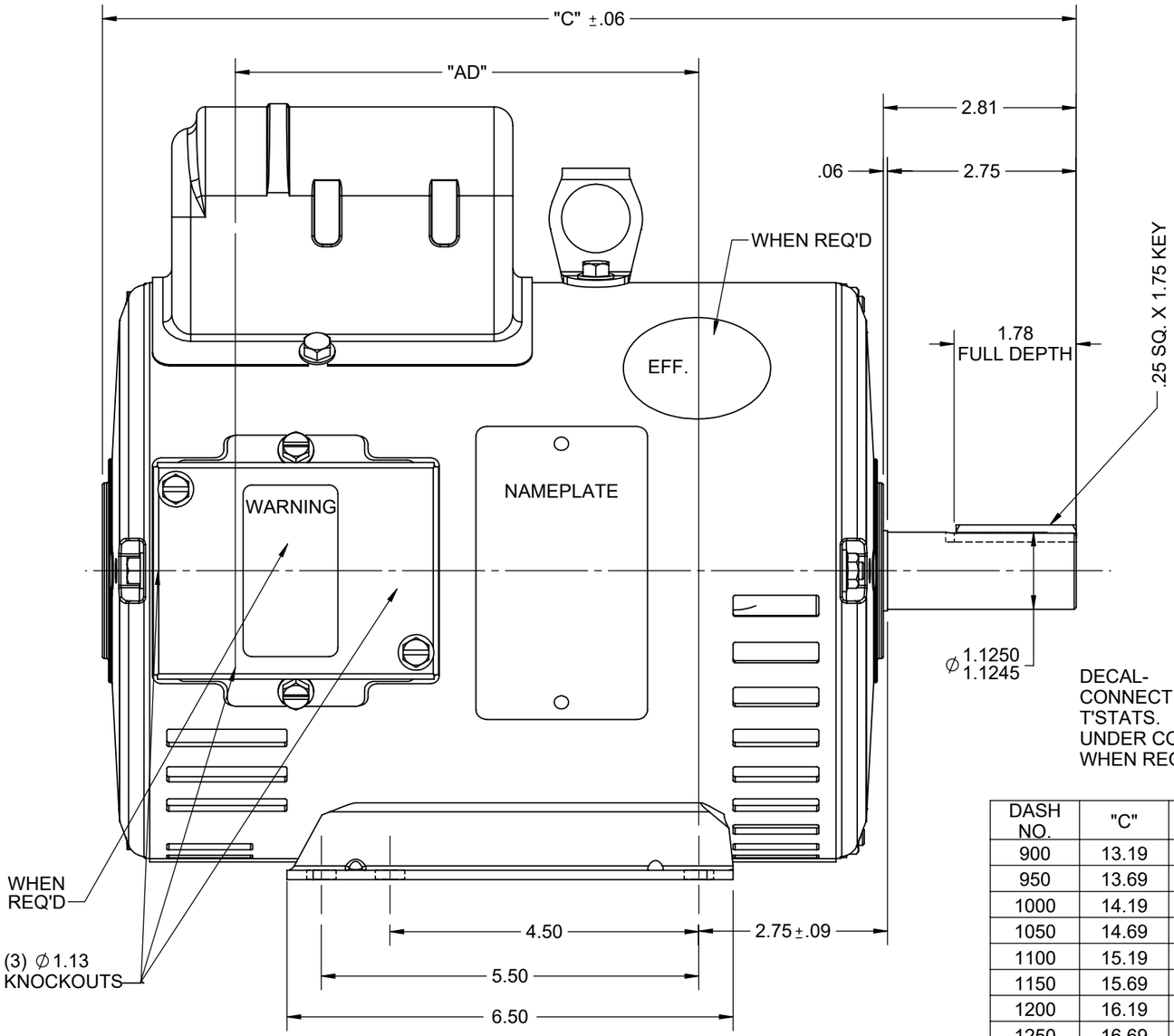

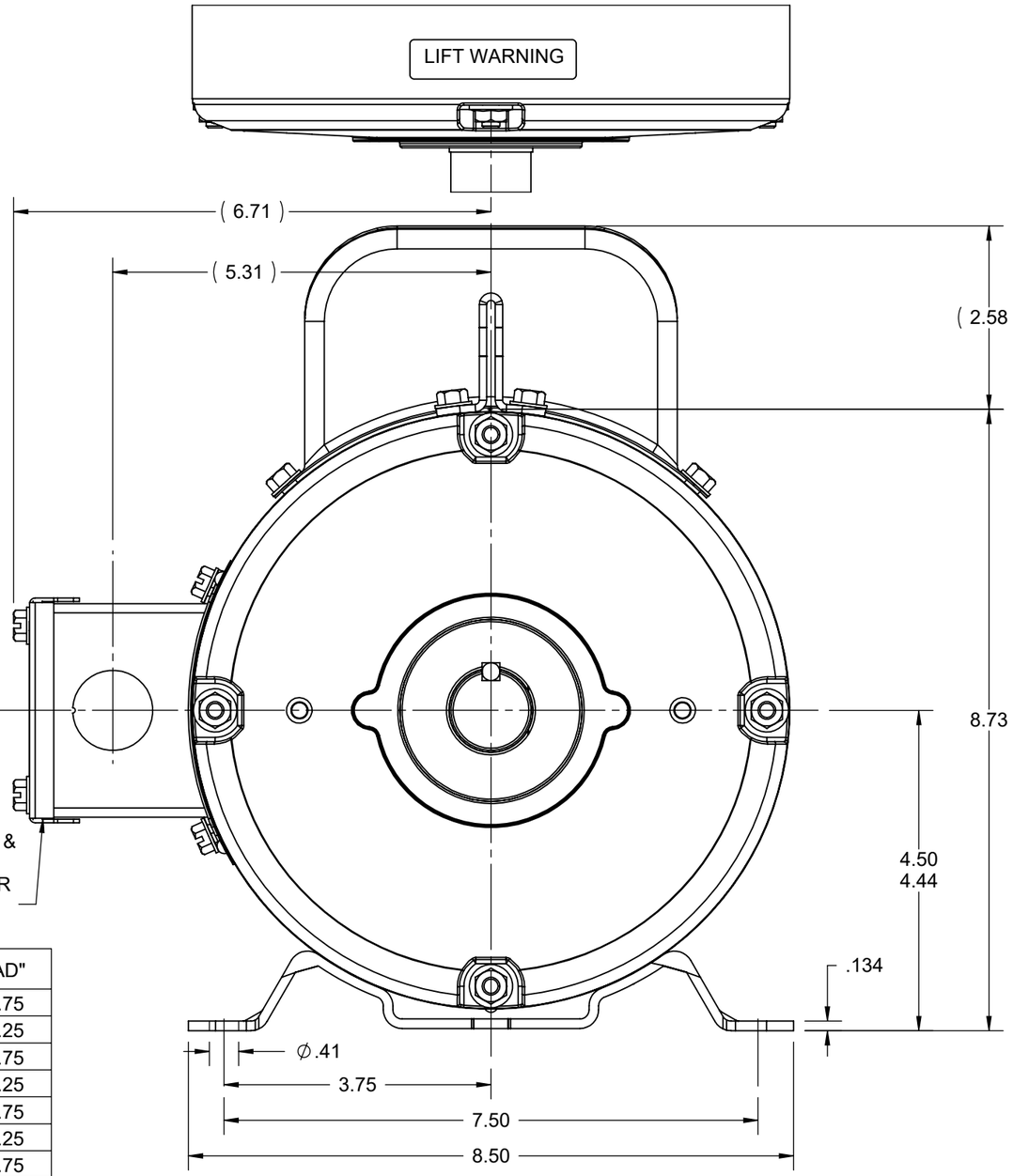

DASH NO.	"C"	"AD"
900	13.19	5.75
950	13.69	6.25
1000	14.19	6.75
1050	14.69	7.25
1100	15.19	7.75
1150	15.69	8.25
1200	16.19	8.75
1250	16.69	9.25

GASKETS THROUGHOUT

DRAWING REVISION: F	REVISION BY: SB	REV DATE/© DATE: 07/23/2025
REQUEST NUMBER: CR-0023556	APPROVED BY: SBD	DATE: 07/23/2025
REQUEST NUMBER DESCRIPTION: DRAWING TITLE BLOCK UPDATED		

COPYRIGHT (PER REVISION DATE) MARATHON ELECTRIC, LLC. ALL RIGHTS RESERVED. PROPRIETARY AND CONFIDENTIAL INFORMATION - THIS DOCUMENT IS THE PROPERTY OF MARATHON ELECTRIC, LLC. ("OWNER") AND CONTAINS OWNER'S PROPRIETARY INFORMATION. ANY PERSON, CORPORATION OR OTHER FIRM RECEIVING IT IS DEEMED, BY RECEIVING IT, TO AGREE THAT IT, AND/OR ANY PART OF IT, SHALL NOT BE DISCLOSED TO ANY PERSON, CORPORATION OR OTHER ENTITY, DUPLICATED, AND/OR USED, EXCEPT AS EXPRESSLY APPROVED IN WRITING IN ADVANCE BY OWNER. THIS DOCUMENT SHALL BE RETURNED TO OWNER UPON REQUEST. IT MAY BE SUBJECT TO CERTAIN RESTRICTIONS UNDER APPLICABLE EXPORT CONTROL LAWS AND REGULATIONS.

TOLERANCES (EXCEPT AS NOTED):

DEC.	INCH	mm	ANGLE
.X	±0.1	[±3]	±7' 30"
.XX	±0.03	[±0.8]	
.XXX	±0.005	[±0.13]	
.XXXX	±0.0005	[±0.013]	

REMOVE BURRS & BREAK SHARP EDGES: .003/.015 [.08/.38] X 45°
CORNER FILLETS: R.02 [.5]
MACHINED SURFACES: 200 INCH / 5.1 mm
mm DIMENSIONS IN [BRACKETS] ARE FOR REFERENCE ONLY

DRAWN BY: PG	marathon™
DATE: 10/02/97	
APPROVED BY	DESCRIPTION: OUTLINE — DRIP PROOF - RIGID MOUNT
DATE	
REFERENCE	MATERIAL / PROCESS/FINISH
THIRD ANGLE PROJECTION	SIZE: B / DRAWING NUMBER: 035370 / SHEET: 1 OF 1

Uncontrolled Copy

VIEW FROM OUTSIDE OF MOTOR AT SWITCH END.

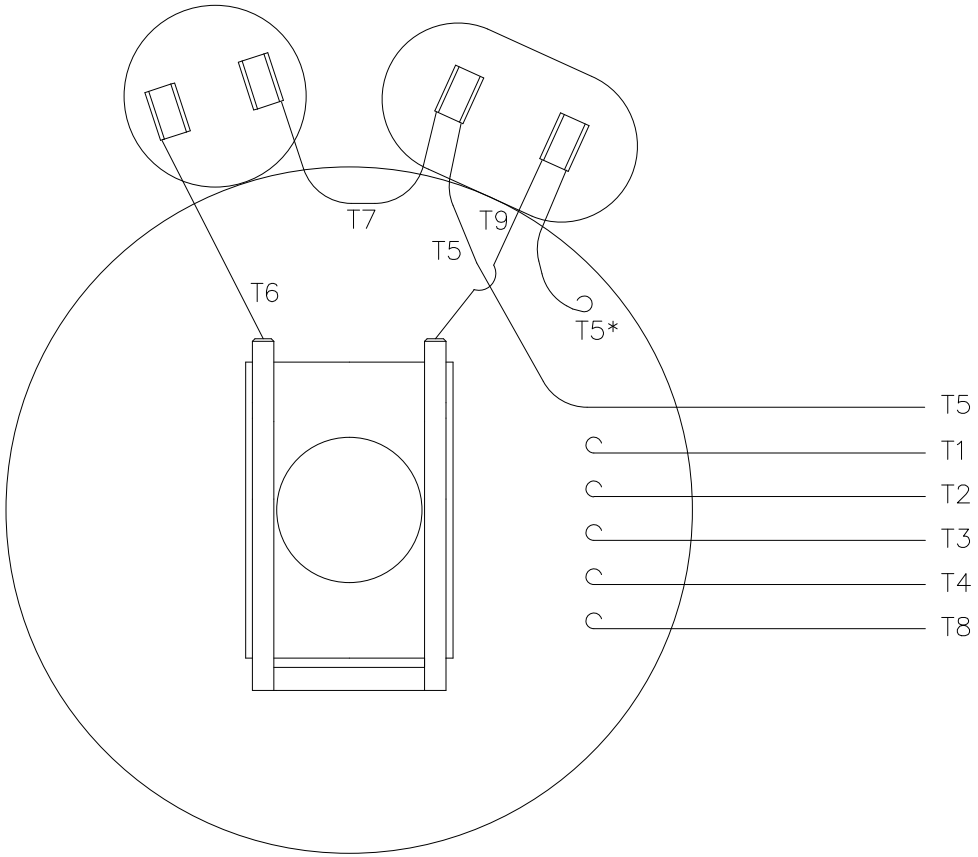

* THIS LEAD MAY BE WHITE

LINE LEADS

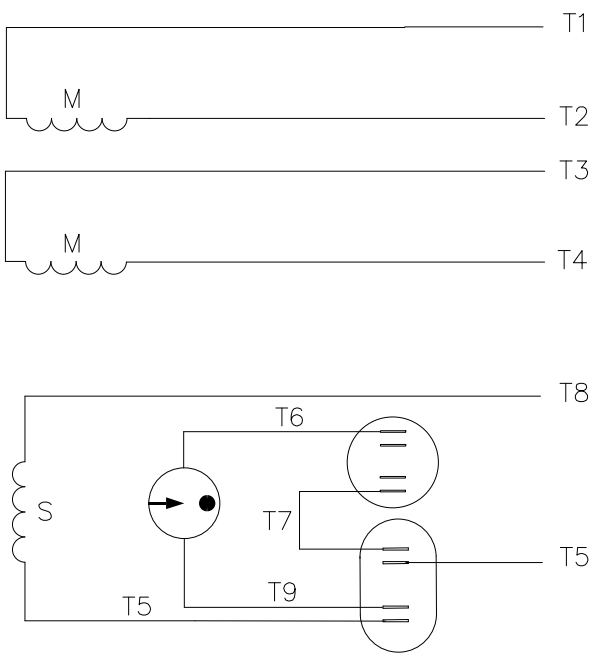

	ROTATION FACING LEAD END	L1	L2	JOIN
HIGH VOLT	C.C.W.	T1	T4 T5	T2,T3 T8
	C.W.	T1	T4 T8	T2,T3 T5
LOW VOLT	C.C.W.	T1 T3,T8	T2,T4 T5	
	C.W.	T1,T3 T5	T2,T4 T8	

DRAWING REVISION	REVISION BY	REV DATE/ © DATE
R	SV	05/11/2026
REQUEST NUMBER	APPROVED BY	DATE
CR-0026249	RMS	05/11/2026

REQUEST NUMBER DESCRIPTION
DRAWING TITLE BLOCK UPDATED

COPYRIGHT (PER REVISION DATE) MARATHON ELECTRIC, LLC. ALL RIGHTS RESERVED. PROPRIETARY AND CONFIDENTIAL INFORMATION - THIS DOCUMENT IS THE PROPERTY OF MARATHON ELECTRIC, LLC. ("OWNER") AND CONTAINS OWNER'S PROPRIETARY INFORMATION. ANY PERSON, CORPORATION OR OTHER FIRM RECEIVING IT IS DEEMED, BY RECEIVING IT, TO AGREE THAT IT, AND/OR ANY PART OF IT, SHALL NOT BE DISCLOSED TO ANY PERSON, CORPORATION OR OTHER ENTITY, DUPLICATED, AND/OR USED, EXCEPT AS EXPRESSLY APPROVED IN WRITING IN ADVANCE BY OWNER. THIS DOCUMENT SHALL BE RETURNED TO OWNER UPON REQUEST. IT MAY BE SUBJECT TO CERTAIN RESTRICTIONS UNDER APPLICABLE EXPORT CONTROL LAWS AND REGULATIONS.

TOLERANCES (EXCEPT AS NOTED):

DEC.	INCH	mm	ANGLE
.X	±0.1	[±3]	±0.5°
.XX	±0.01	[±0.3]	
.XXX	±0.005	[±0.13]	
.XXXX	±0.0005	[±0.013]	

REMOVE BURRS & BREAK SHARP EDGES: .003/.015 [.08/.38] X 45 °
CORNER FILLETS: R.02 [.5]
MACHINED SURFACES: 125 INCH / 3.2 mm
mm DIMENSIONS IN [BRACKETS] ARE FOR REFERENCE ONLY

DRAWN BY	JRW
DATE	10/11/74
APPROVED BY	TEM
DATE	10/11/74
REFERENCE	A-005053
THIRD ANGLE PROJECTION	

marathon™

DESCRIPTION
EXT. WIRING DIAGRAM
TYPE "K" W/O PROTECTOR

MATERIAL	PROCESS/FINISH
DECAL-004012	

SIZE	DRAWING NUMBER	SHEET
A	005054-01	1 OF 1

4 of 4