marathon®

General Purpose Motors

Model No: 184TTFB6029
Catalog No: GT1313

General Purpose Motor, 5 & 3 HP, 3 Ph, 60 & 50 Hz, 230/460 & 190/380 V, 1800 RPM, 184TC Frame, TEFC

©2026 Marathon, All Rights Reserved.

marathon®

Product Information Packet: Model No: 184TTFB6029, Catalog No: GT1313 General Purpose Motor, 5 & 3 HP, 3 Ph, 60 & 50 Hz, 230/460 & 190/380 V, 1800 RPM, 184TC Frame, TEFC

Nameplate Specifications

Phase	**3**	Output HP	**5 & 3 Hp**
Output KW	**3.7 & 2.2 kW**	Voltage	**230/460 & 190/380 V**
Speed	**1740 & 1468 r/min**	Synchronous RPM	**1800 & 1500 r/min**
Service Factor	**1.15 & 1.0**	Frame	**184TC**
Enclosure	**Totally Enclosed Fan Cooled**	Thermal Protection	**No Protection**
Efficiency	**89.5 & 89.5 %**	Ambient Temperature	**40 °C**
Frequency	**60 & 50 Hz**	Current	**12.4/6.2 & 9.6/4.8 A**
Power Factor	**85**	Duty	**Continuous**
Insulation Class	**F**	Design Code	**B**
KVA Code	**L**	Drive End Bearing Size	**6206**
Opp Drive End Bearing Size	**6205**	UL	**Recognized**
CSA	**Y**	CE	**Y**
IP Code	**43**	Number of Speeds	**1**

Technical Specifications

Electrical Type	**Squirrel Cage Induction Run**	Starting Method	**Across The Line**
Poles	**4**	Rotation	**Reversible**
Resistance Main	**2.2 O**	Mounting	**Round**
Motor Orientation	**Horizontal**	Drive End Bearing	**Ball**
Opp Drive End Bearing	**Ball**	Frame Material	**Rolled Steel**
Shaft Type	**T**	Overall Length	**16.73 in**
Shaft Diameter	**1 1/8 in**	Shaft Extension	**2.62 in**
Assembly/Box Mounting	**F1/F2 Capable**		

Drawings

Connection Drawing	**EE7308**	Outline Drawing	**SS620307-184TC**

This is an uncontrolled document once printed or downloaded and is subject to change without notice. Date Created: 16/10/2026

Uncontrolled Copy

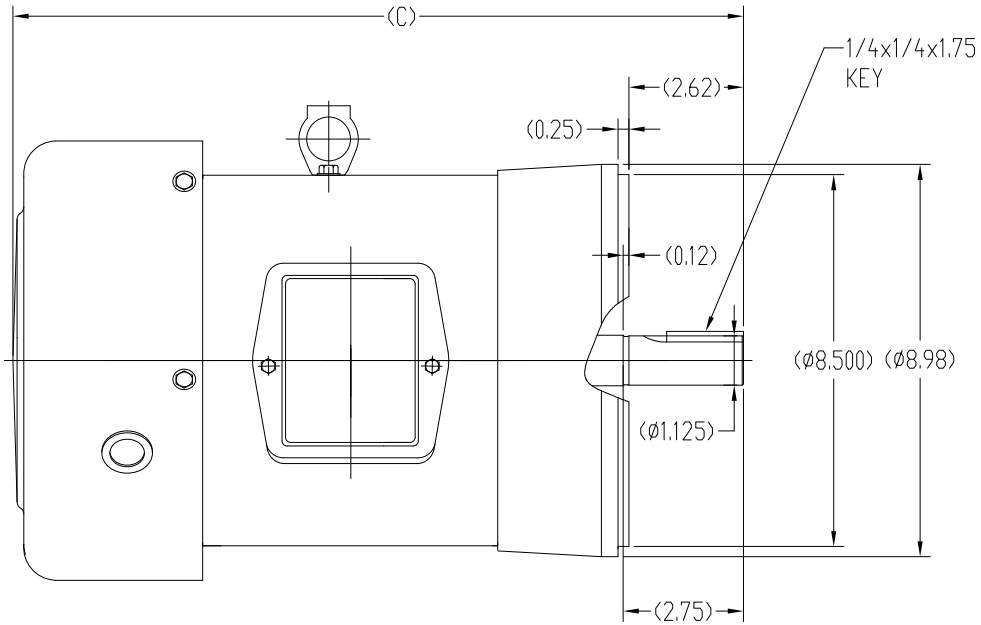

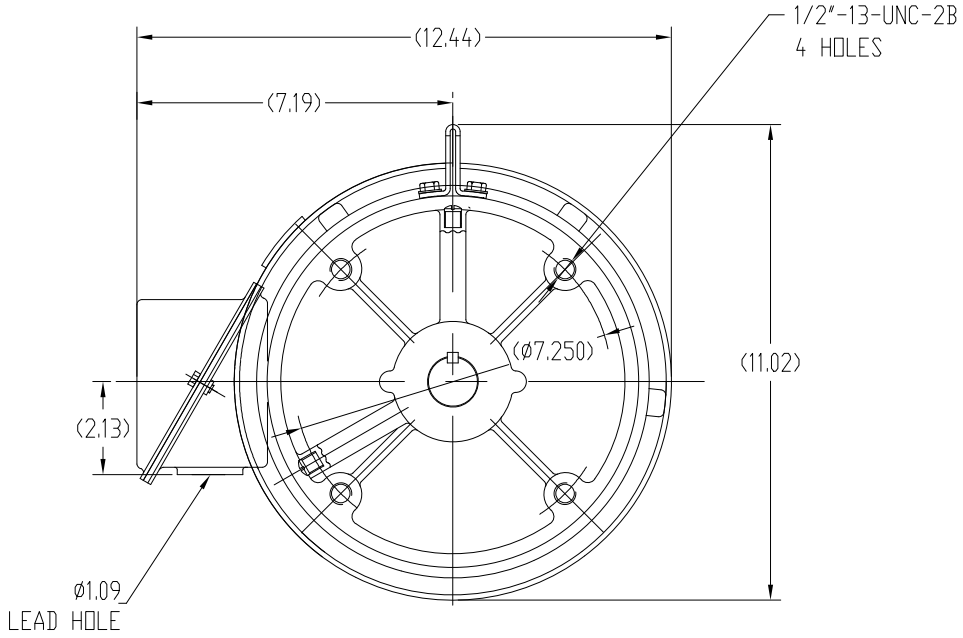

TTFB 182TC	15.75
TTFB 184TC	16.73
FRAME	C

DRAWING REVISION: C	REVISION BY: SV	REV DATE/ © DATE: 09/23/2026
REQUEST NUMBER: CR-0027816	APPROVED BY: RMS	DATE: 09/23/2026

REQUEST NUMBER DESCRIPTION
DRAWING TITLE BLOCK UPDATED

COPYRIGHT (PER REVISION DATE) MARATHON ELECTRIC, LLC. ALL RIGHTS RESERVED. PROPRIETARY AND CONFIDENTIAL INFORMATION - THIS DOCUMENT IS THE PROPERTY OF MARATHON ELECTRIC, LLC. ("OWNER") AND CONTAINS OWNER'S PROPRIETARY INFORMATION. ANY PERSON, CORPORATION OR OTHER FIRM RECEIVING IT IS DEEMED, BY RECEIVING IT, TO AGREE THAT IT, AND/OR ANY PART OF IT, SHALL NOT BE DISCLOSED TO ANY PERSON, CORPORATION OR OTHER ENTITY, DUPLICATED, AND/OR USED, EXCEPT AS EXPRESSLY APPROVED IN WRITING IN ADVANCE BY OWNER. THIS DOCUMENT SHALL BE RETURNED TO OWNER UPON REQUEST. IT MAY BE SUBJECT TO CERTAIN RESTRICTIONS UNDER APPLICABLE EXPORT CONTROL LAWS AND REGULATIONS.

TOLERANCES (EXCEPT AS NOTED):

DEC.	INCH	mm	ANGLE
.X	±0.1	[±3]	±0.5°
.XX	±0.03	[±0.8]	
.XXX	±0.005	[±0.13]	
.XXXX	±0.0005	[±0.013]	

REMOVE BURRS & BREAK SHARP EDGES: .003/.015 [.08/.38] X 45 °
CORNER FILLETS: R.02 [.5]
MACHINED SURFACES: 125 INCH / 3.2 mm
mm DIMENSIONS IN [BRACKETS] ARE FOR REFERENCE ONLY

DRAWN BY	SY
DATE	04/19/2010
APPROVED BY	CL
DATE	04/19/2010
REFERENCE	
THIRD ANGLE PROJECTION	

marathon™

DESCRIPTION: OUTLINE
182/184TC - TTFB

MATERIAL | PROCESS/FINISH

SIZE	DRAWING NUMBER	SHEET
B	SS620307	1 OF 1

Uncontrolled Copy

THREE PHASE
DUAL VOLTAGE MOTOR

HIGH VOLTAGE

(U1) T1 — L1
(V1) T2 — L2
(W1) T3 — L3
(U2) T4
(U3) T7
(V2) T5
(V3) T8
(W2) T6
(W3) T9

LOW VOLTAGE

(U1) T1
(U3) T7 — L1
(V1) T2
(V3) T8 — L2
(W1) T3
(W3) T9 — L3
(U2) T4
(V2) T5
(W2) T6

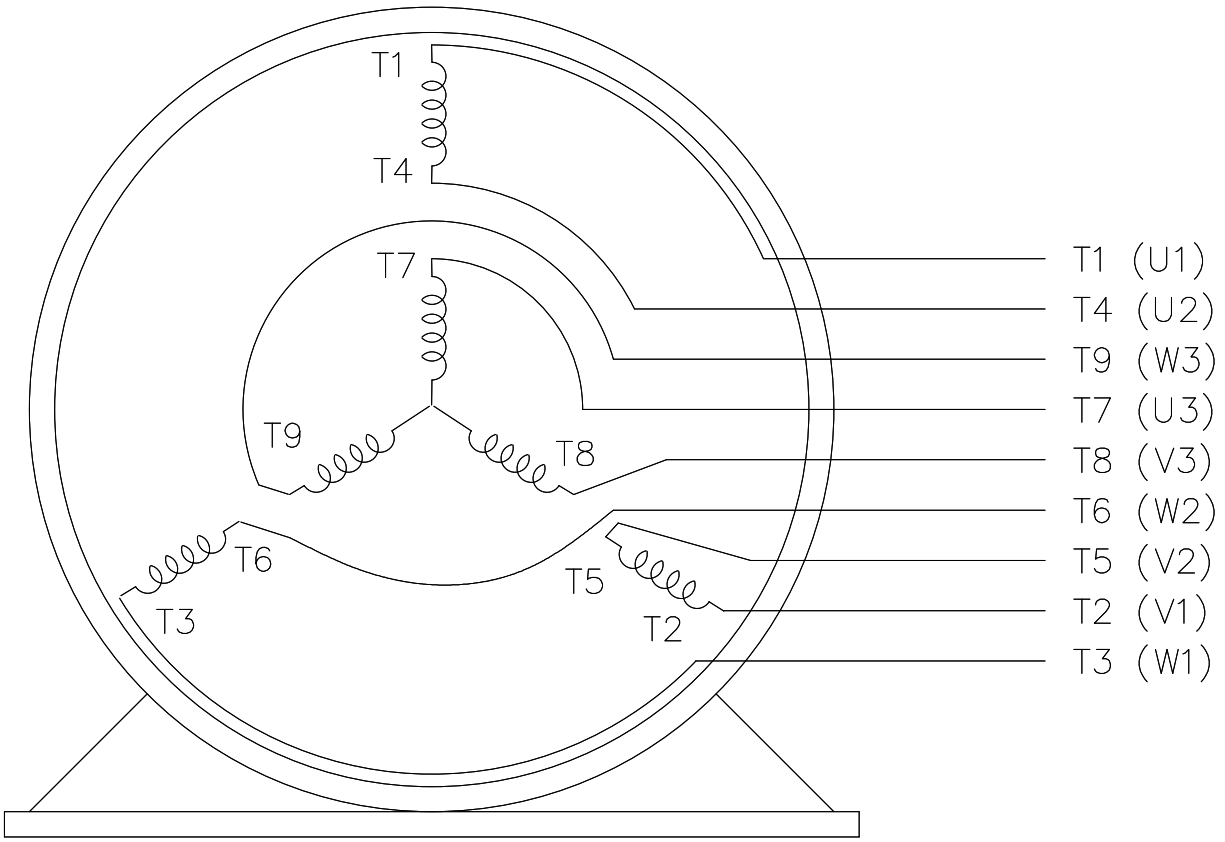

VIEW OF TERMINAL END

REF.
WINDING DIAGRAM

T8Y, T2Y, T2BL, T4BX, T2EC, T2G
T6BZ, T2B, T6BL, T4AV, T6B, T4B

OPTIONAL CORD CONNECTION

L1 — WHITE
L2 — RED
L3 — BLACK

DRAWING REVISION	REVISION BY	REV DATE/ © DATE
J	SB	08/01/2025
REQUEST NUMBER	APPROVED BY	DATE
CR-0023654	SBD	08/01/2025

REQUEST NUMBER DESCRIPTION
DRAWING TITLE BLOCK UPDATED

COPYRIGHT (PER REVISION DATE) MARATHON ELECTRIC, LLC. ALL RIGHTS RESERVED. PROPRIETARY AND CONFIDENTIAL INFORMATION - THIS DOCUMENT IS THE PROPERTY OF MARATHON ELECTRIC, LLC. ("OWNER") AND CONTAINS OWNER'S PROPRIETARY INFORMATION. ANY PERSON, CORPORATION OR OTHER FIRM RECEIVING IT IS DEEMED, BY RECEIVING IT, TO AGREE THAT IT, AND/OR ANY PART OF IT, SHALL NOT BE DISCLOSED TO ANY PERSON, CORPORATION OR OTHER ENTITY, DUPLICATED, AND/OR USED, EXCEPT AS EXPRESSLY APPROVED IN WRITING IN ADVANCE BY OWNER. THIS DOCUMENT SHALL BE RETURNED TO OWNER UPON REQUEST. IT MAY BE SUBJECT TO CERTAIN RESTRICTIONS UNDER APPLICABLE EXPORT CONTROL LAWS AND REGULATIONS.

PRIMARY DIMENSIONS ARE INCH
mm DIMENSIONS IN [BRACKETS]
ARE FOR REFERENCE ONLY

DRAWN BY	RM
DATE	11/20/1990
APPROVED BY	SAS
DATE	04/24/2003
REFERENCE	
THIRD ANGLE PROJECTION	

marathon™

DESCRIPTION
CONN DIAGRAM-EXTERNAL
3Ø - DUAL VOLTAGE MOTOR

MATERIAL	PROCESS/FINISH

SIZE	DRAWING NUMBER	SHEET
A	4 of 6 EE7308	1 OF 1

Data Sheet

Date: 6/20/2017
Customer:
Attention:
Submitted by: FAREEDA DUDEKULA

marathon electric

184TTFB6029

Submittal

Data @ 460 V

Motor Load Data

Load	0%	25%	50%	75%	100%	115%	125%	LR	
Current (Amps)	2.80	3.2	4.0	5.0	6.2	6.9	7.7	56.0	
Torque (ft-lb)	0.00	3.7	7.4	11.2	15.1	17.4	19.0	38.0	
RPM	1800	1790	1780	1755	1740	1,732	1725	0	
Efficiency (%)		86.5	88.5	89.5	89.5	89.5	88.5		
P.F. (%)	5.5	42.5	64.5	76.0	85.0	85.5	85.5	53.0	

Motor Speed Data

	LR	Pull-Up	BD	Rated	Idle
Speed (RPM)	0	900	1450	1740	1800
Current (Amps)	56.0	50.5	36.0	6.2	2.80
Torque (ft-lb)	38.0	34.2	57.4	15.1	0.00

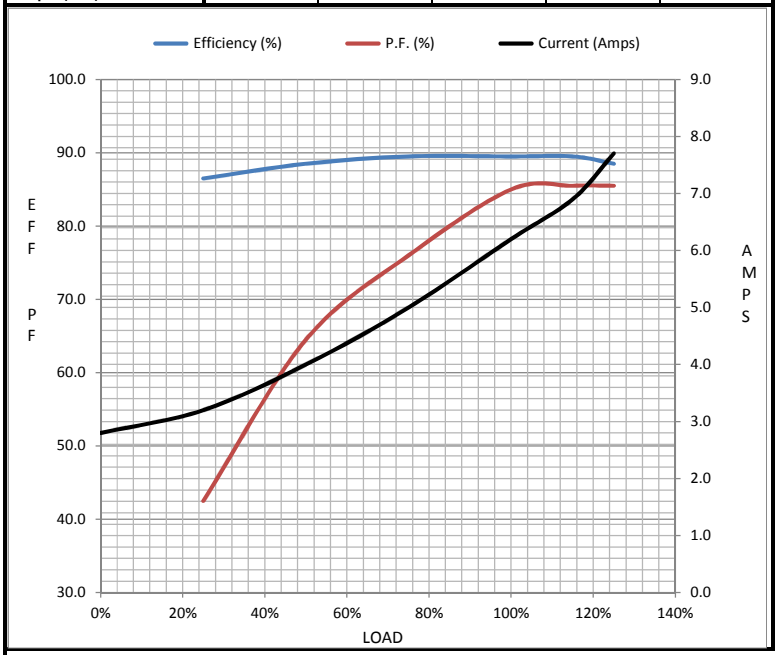

Information Block

HP	5.0
Sync. RPM	1800
Frame	184
Enclosure	TEFC
Construction	TFC
Voltage	230/460#190/380 V
Frequency	60 Hz
Design	A
LR Code letter	K
Service Factor	1.15
Temp Rise @ FL	55 ° C
Duty	CONT
Ambient	40 ° C
Elevation	1,000 feet
Rotor/Shaft wk²	0.50 Lb-Ft²
Ref Wdg	CHT18440007 NONE
Sound Pressure @ 1M	62 dBA
VFD Rating	NONE
Outline Dwg	SS620307
Conn. Diag	EE7308
Additional Specifications:	
0	
0	

EQUIV CKT (OHMS / PHASE)

R1	R2	X1	X2	Xm
1.3040	1.4740	3.8270	4.0370	106.8800

Speed -Torque Curve

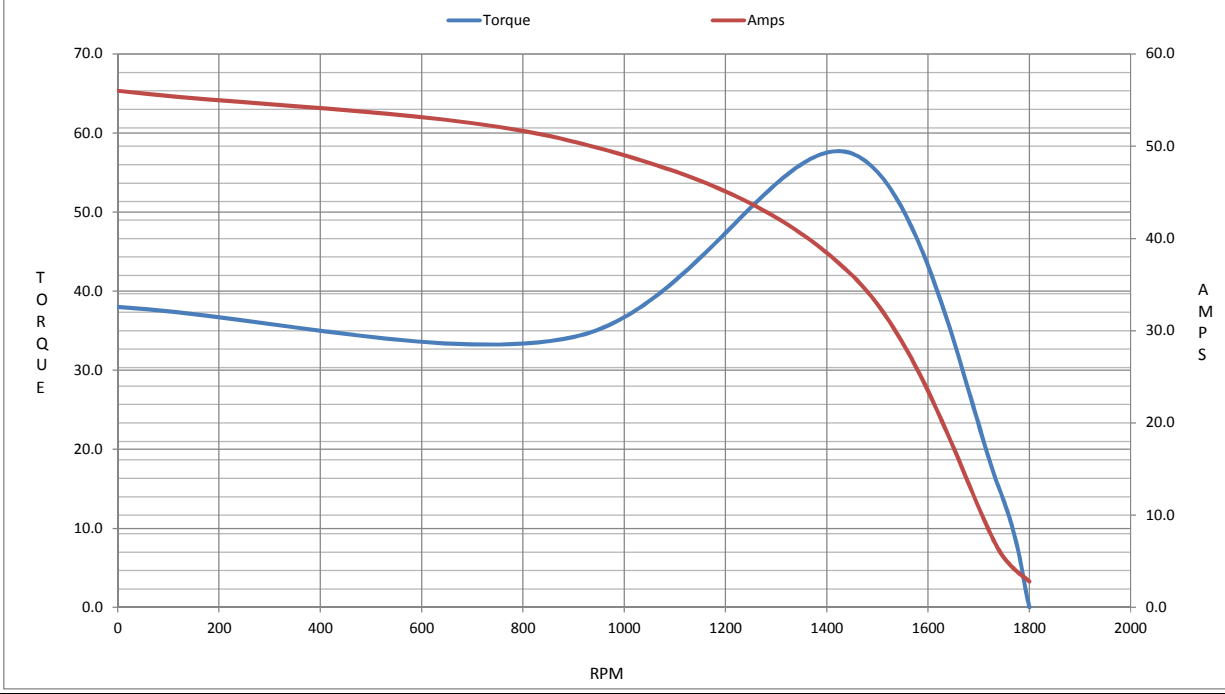

Uncontrolled Copy

CERTIFICATION DATA SHEET

Model#:	184TTFB6029 BB	**WINDING#:**	CHT18440007 NONE 1
CONN. DIAGRAM:	EE7308	**ASSEMBLY:**	F1/F2 CAPABLE
OUTLINE:	SS620307		

TYPICAL MOTOR PERFORMANCE DATA

HP	KW	SYNC. RPM	F.L. RPM	FRAME	ENCLOSURE	KVA CODE	DESIGN
5&3	3.70&2.24	1800	1740&1468	184TC	TEFC	L	B

PH	Hz	VOLTS	FL AMPS	START TYPE	DUTY	INSL	S.F	AMB°C	ELEVATION
3	60/50	230/460#190/380	12.4/6.2&9.6/4.8	ACROSS THE LINE	CONTINUOUS	F7	1.15/1.0	40	3300

FULL LOAD EFF: 89.5&89.5	3/4 LOAD EFF: 89.5	1/2 LOAD EFF: 88.5	GTD. EFF	ELEC. TYPE	NO LOAD AMPS
FULL LOAD PF: 85&80	3/4 LOAD PF: 76	1/2 LOAD PF: 64.5	88.5	SQ CAGE IND RUN	5.6 / 2.8

F.L. TORQUE	LOCKED ROTOR AMPS	L.R. TORQUE	B.D. TORQUE	F.L. RISE°C
15.1 LB-FT	112 / 56	38 LB-FT 252	57.4 LB-FT 380	55

SOUND PRESSURE @ 3 FT.	SOUND POWER	ROTOR WK^2	MAX. WK^2	SAFE STALL TIME	STARTS /HOUR	APPROX. MOTOR WGT
62 dBA	72 dBA	0.5 LB-FT^2	30 LB-FT^2	20 SEC.	2	110 LBS.

*** SUPPLEMENTAL INFORMATION ***

DE BRACKET TYPE	ODE BRACKET TYPE	MOUNT TYPE	ORIENTATION	SEVERE DUTY	HAZARDOUS LOCATION	DRIP COVER	SCREENS	PAINT
C-FACE	STANDARD	ROUND	HORIZONTAL	FALSE	NONE	FALSE	NONE	BLUE (ENAMEL)

BEARINGS		GREASE	SHAFT TYPE	SPECIAL DE	SPECIAL ODE	SHAFT MATERIAL	FRAME MATERIAL
DE	OPE						
BALL 6206	BALL 6205	POLYREX EM	T	NONE	NONE	1045 HOT ROLLED (C-204)	ROLLED STEEL

THERMO-PROTECTORS				THERMISTORS	CONTROL	SPACE /n HEATERS
THERMOSTATS	PROTECTORS	WDG RTDs	BRG RTDs			
NONE	NOT	NONE	NONE	NONE	FALSE	NONE VOLTS

If Inverter equals NONE, contact factory for further information

INVERTER TORQUE: NONE
INV. HP SPEED RANGE: NONE

ENCODER: NONE
NONE NONE
NONE NONE PPR

BRAKE: NONE NONE
NONE P/N NONE
NONE NONE
NONE FT-LB NONE V NONE Hz

*
N
O
T
E
S
*

DATE: 06/28/2017 06:54:04 AM
FORM 3531 REV.3 02/07/99
** Subject to change without notice.