ABB BALDOR RELIANCE

Customer information packet

ECR9406TR

40HP, 1185RPM, 3PH, 60HZ, 365T, A3668M, TEFC, F
Class - None
Division - Not Applicable

Copyright © All product information within this document is subject to ABB Motors and Mechanical Inc. copyright © protection, unless otherwise noted.
11/5/2026 10:16:06 AM

Specifications

Enclosure	TEFC
Frame	365T
Frame Material	Iron
Frequency	60.00 Hz
Haz Area Class and Group	None
Haz Area Division	Not Applicable
Motor Letter Type	Three Phase
Output @ Frequency	40.000 HP @ 60 HZ
Phase	3
Synchronous Speed @ Frequency	1200 RPM @ 60 HZ
Voltage @ Frequency	230.0 V @ 60 HZ
	460.0 V @ 60 HZ
Agency Approvals	CCSAUSEEV
	NEMA PREMIUM
	NEMA_PREMIUM
	UR
Ambient Temperature	40 °C
Auxiliary Box	NO AUXILLARY BOX
Base Indicator	Rigid
Bearing Grease Type	Mobil SHC 220 (Athens Only)
Constant Torque Speed Range	6-60
Current @ Voltage	98.200 A @ 230.0 V
	49.100 A @ 460.0 V
Design Code	A
Drip Cover	No Drip Cover
Duty Rating	CONT
Efficiency @ 100% Load	94.1 %
Feedback Device	NO FEEDBACK
Heater Indicator	No Heater
High Voltage Full Load Amps	49.1 a
Insulation Class	F
Inverter Code	Inverter Ready

Part Detail

Revision	R
Type	AC
Mech. spec.	
Base	
Status	PRD/A
Elec. spec.	A36WG3909
Layout	617428-034
Eff. date	02-09-2026
CD Diagram	416820-002
Poles	06
Leads	9#4
Proprietary	False
Created date	02-03-2015

KVA Code	G
Lifting Lugs	No Lifting Lugs
Max Speed	1800 rpm
Motor Lead Quantity/Wire Size	9 @ 4 AWG
Motor Standards	NEMA
Motor Type	A3668M
Mounting Arrangement	F1
Number of Poles	6
Overall Length	33.49 IN
Power Factor	81
Product Family	Crusher / Chipper
Pulley End Bearing Type	Roller
Pulley Face Code	Standard
Service Factor	1.25
Shaft Diameter	2.374 IN
Shaft Ground Indicator	No Shaft Grounding
Shaft Rotation	Reversible
Shaft Slinger Indicator	No Slinger
Speed	1185 rpm
Speed Code	Single Speed
Starting Method	Direct on line
Thermal Device - Bearing	None
Thermal Device - Winding	None

Nameplate

NP3980LUA

CAT #	ECR9406TR	**SER**		**CC**	010A								
SPEC	P36G3500	**RATING**	40C AMB-CONT										
HZ	**VOLTS**	**AMPS**	**RPM**	**HP**	**CODE**	**SF**	**DES**	**PF**		**NEMA NOM. EFF**			
60	230/460	98.2/49.1	1185	40	G	1.25	A	81	%	94.1	%		
	-								%		%		
PH	3	**CL**	F	**MAX CORR KVAR**	24.4								
BRG	**DE**	NU313	**ODE**	6313	**ENCL**	TEFC	**FR**	365T		55			
GREASE	MOBIL SHC 220				**MTR WT**	912	**LBS**						
USABLE AT	50HZ 30HP 190/380V 90/45A				SF1.0								
INV READY	**1.0 SF VPWM**	**CT**	10-60	**HZ**	6:1	**VT**	0-60	**HZ**	1000:1	**CHP**	60-90	**HZ**	1.5:1
MAX RPM	1800	SFA 120/60											

DUTY MASTER ALTERNATING CURRENT MOTORS

SQUIRREL-CAGE INDUCTION
CAST IRON CONSTRUCTION

ENCLOSURE: TOTALLY ENCLOSED
MOUNTING: FOOT

FRAMES 364T-365T

COOLING: FAN COOLED

617428-034

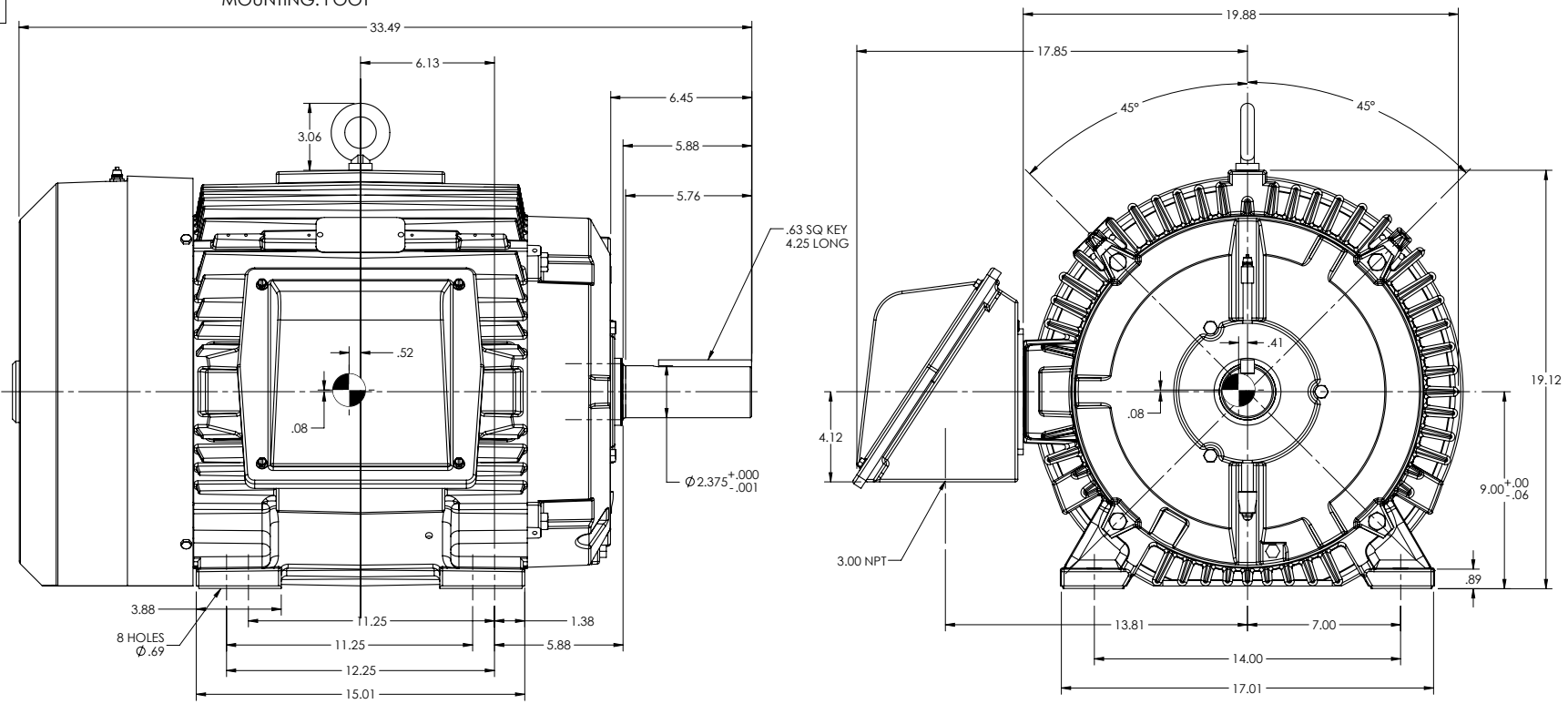

⌖ DENOTES CENTER GRAVITY VARY ± 1.00 INCH

MAXIMUM PERMISSIBLE SHAFT RUNOUT WHEN MEASURED AT END OF STD. SHAFT EXTENSION IS .002 T.I.R. UP TO AND INCLUDING 1.625 DIA. AND .003 T.I.R. 1.625 DIA. TO 5 INCH DIA.

CONDUIT BOXES LOCATED ON OPPOSITE SIDE WHEN F-2, W-1, W-4, W-5, W-7, OR C-1 MOUNTING IS SPECIFIED

WEIGHT (LBS): 364T = 865
365T = 890

MOTOR WEIGHTS MAY VARY BY 15% DEPENDING UPON RATING.

CUSTOMER IS RESPONSIBLE FOR DETERMINING THAT BALDOR'S PRODUCT WILL PERFORM SUITABLY IN THE INTENDED APPLICATION

REV. DESC: NEW ISSUE			
REV: C	VERSION: 03	REVISED: 01:52:13 06/13/2024	TDR: 000001234622
MODEL NO. 617428-034			REF:
BY: RAGGDM			B

BALDOR

DIM SHEET HOR 364-5T TEFC XT

617428-034

416820-002

A-C MOTOR
CONNECTION DIAGRAM
STANDARD 9 LEAD DELTA-CONNECTED

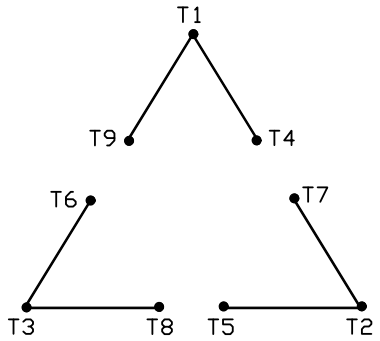

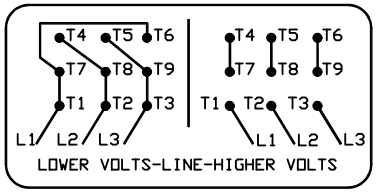

(N. P. 1575-B)

REV. DESC: ADJUST TEXT DARKNESS		
REV. LTR: B	VERSION: 02	TDR: 000001285318
FILE: \RAG\00022\453	REVISED: 09:36:26 09/24/2026	BY: USJOSUL
MTL: –		

ABB

CONN DIAG – STANDARD 9 LEAD, DELTA-CONNECTED

SH1 of 1

416820-002