marathon®

General Purpose Motors

Model No: 365TTFCA6036
Catalog No: GT1043

General Purpose Motor, 75 & 60 HP, 3 Ph, 60 & 50 Hz, 230/460 & 190/380 V, 1800 RPM, 365T Frame, TEFC

©2026 Marathon, All Rights Reserved.

marathon®

Product Information Packet: Model No: 365TTFCA6036, Catalog No: GT1043 General Purpose Motor, 75 & 60 HP, 3 Ph, 60 & 50 Hz, 230/460 & 190/380 V, 1800 RPM, 365T Frame, TEFC

Nameplate Specifications

Phase	**3**	Output HP	**75 & 60 Hp**
Output KW	**56.0 & 45.0 kW**	Voltage	**230/460 & 190/380 V**
Speed	**1782 & 1480 r/min**	Synchronous RPM	**1800 & 1500 r/min**
Service Factor	**1.15 & 1.15**	Frame	**365T**
Enclosure	**Totally Enclosed Fan Cooled**	Thermal Protection	**No Protection**
Efficiency	**95.4 & 95 %**	Ambient Temperature	**40 °C**
Frequency	**60 & 50 Hz**	Current	**173/86.5 & 166/83 A**
Power Factor	**85**	Duty	**Continuous**
Insulation Class	**F**	Design Code	**B**
KVA Code	**G**	Drive End Bearing Size	**6314**
Opp Drive End Bearing Size	**6313**	UL	**Recognized**
CSA	**Y**	CE	**Y**
IP Code	**44**	Number of Speeds	**1**

Technical Specifications

Electrical Type	**Squirrel Cage Induction Run**	Starting Method	**Wye Start Delta Run**
Poles	**4**	Rotation	**Reversible**
Resistance Main	**.091 O**	Mounting	**Rigid Base**
Motor Orientation	**Horizontal**	Drive End Bearing	**Ball**
Opp Drive End Bearing	**Ball**	Frame Material	**Cast Iron**
Shaft Type	**T**	Overall Length	**38.39 in**
Shaft Diameter	**2 3/8 in**	Shaft Extension	**5.87 in**
Assembly/Box Mounting	**F1/F2 Capable**		

Drawings

Connection Drawing	**EE7308AA**	Outline Drawing	**SS620115-365T**

This is an uncontrolled document once printed or downloaded and is subject to change without notice. Date Created: 16/10/2026

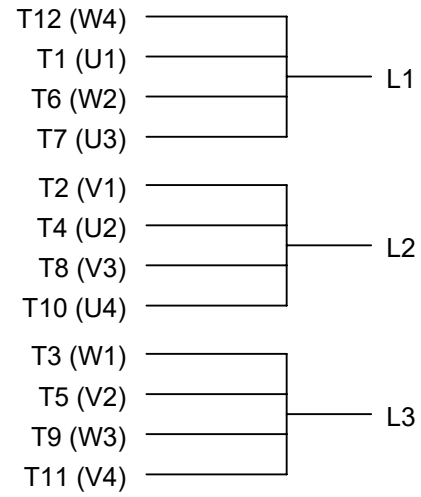

LOW VOLTAGE

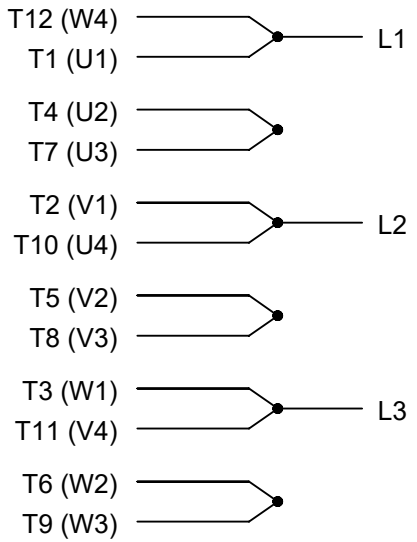

HIGH VOLTAGE

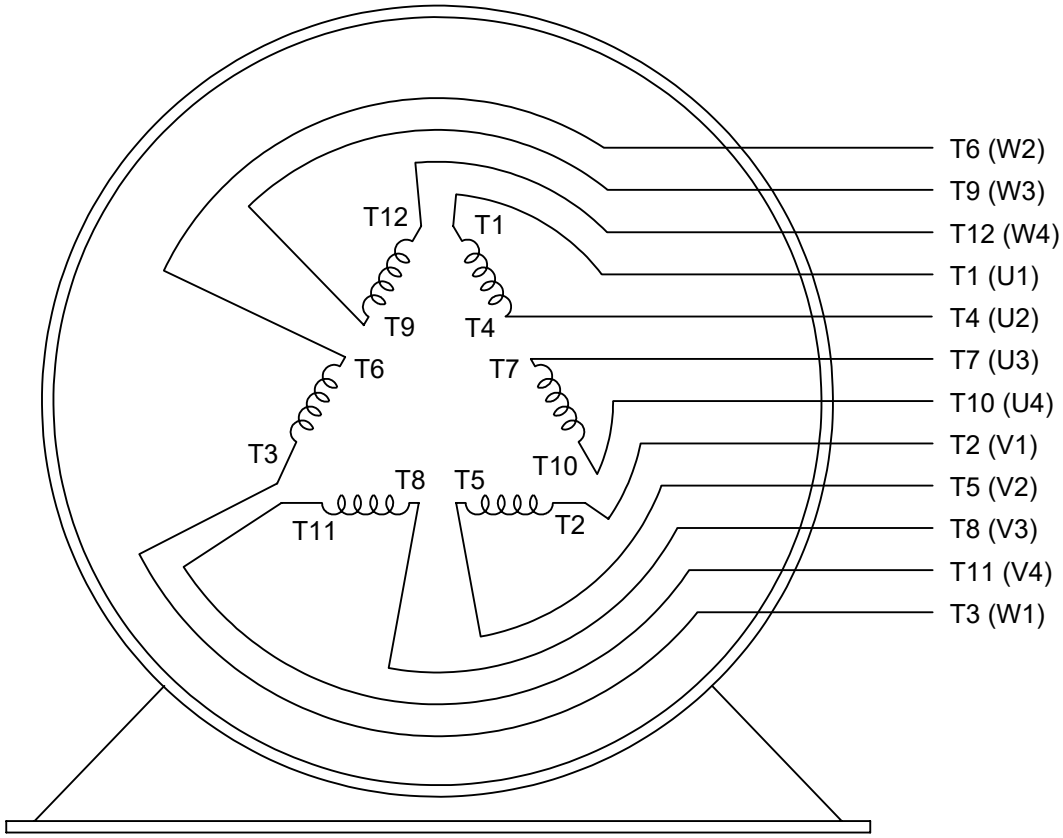

VIEW OF TERMINAL END

DRAWING REVISION: L	REVISION BY: SB	REV DATE/© DATE: 08/01/2025
REQUEST NUMBER: CR-0023654	APPROVED BY: SBD	DATE: 08/01/2025

REQUEST NUMBER DESCRIPTION: DRAWING TITLE BLOCK UPDATED

COPYRIGHT (PER REVISION DATE) MARATHON ELECTRIC, LLC. ALL RIGHTS RESERVED. PROPRIETARY AND CONFIDENTIAL INFORMATION - THIS DOCUMENT IS THE PROPERTY OF MARATHON ELECTRIC, LLC. ("OWNER") AND CONTAINS OWNER'S PROPRIETARY INFORMATION. ANY PERSON, CORPORATION OR OTHER FIRM RECEIVING IT IS DEEMED, BY RECEIVING IT, TO AGREE THAT IT, AND/OR ANY PART OF IT, SHALL NOT BE DISCLOSED TO ANY PERSON, CORPORATION OR OTHER ENTITY, DUPLICATED, AND/OR USED, EXCEPT AS EXPRESSLY APPROVED IN WRITING IN ADVANCE BY OWNER. THIS DOCUMENT SHALL BE RETURNED TO OWNER UPON REQUEST. IT MAY BE SUBJECT TO CERTAIN RESTRICTIONS UNDER APPLICABLE EXPORT CONTROL LAWS AND REGULATIONS.

PRIMARY DIMENSIONS ARE INCH
mm DIMENSIONS IN [BRACKETS]
ARE FOR REFERENCE ONLY

DRAWN BY: LZ	
DATE: 01-12-1994	
APPROVED BY: GK	
DATE: 01-14-1994	
REFERENCE	
THIRD ANGLE PROJECTION	

marathon™

DESCRIPTION: CONN DIAGRAM-EXTERNAL
3Ø-2/1 DELTA-12 LEADS

MATERIAL	PROCESS/FINISH

SIZE	DRAWING NUMBER	SHEET
A	EE7308AA	1 OF 1

Data Sheet

Date: 6/20/2017
Customer:
Attention:
Submitted by: FAREEDA DUDEKULA

365TTFCA6036

Submittal

Data @ 460 V

Motor Load Data

Load	0%	25%	50%	75%	100%	115%	125%	LR	
Current (Amps)	24.5	32.0	47.5	65.5	86.5	101	110	530	
Torque (ft-lb)	0.00	55.0	110	166	221	254	280	460	
RPM	1800	1795	1792	1788	1782	1,780	1775	0	
Efficiency (%)		93.0	95.0	95.4	95.4	95.0	94.5		
P.F. (%)	4.5	59.0	78.0	84.0	85.0	85.5	85.5	30.0	

Motor Speed Data

	LR	Pull-Up	BD	Rated	Idle
Speed (RPM)	0	900	1730	1782	1800
Current (Amps)	530	475	275	86.5	24.5
Torque (ft-lb)	460	400	550	221	0.00

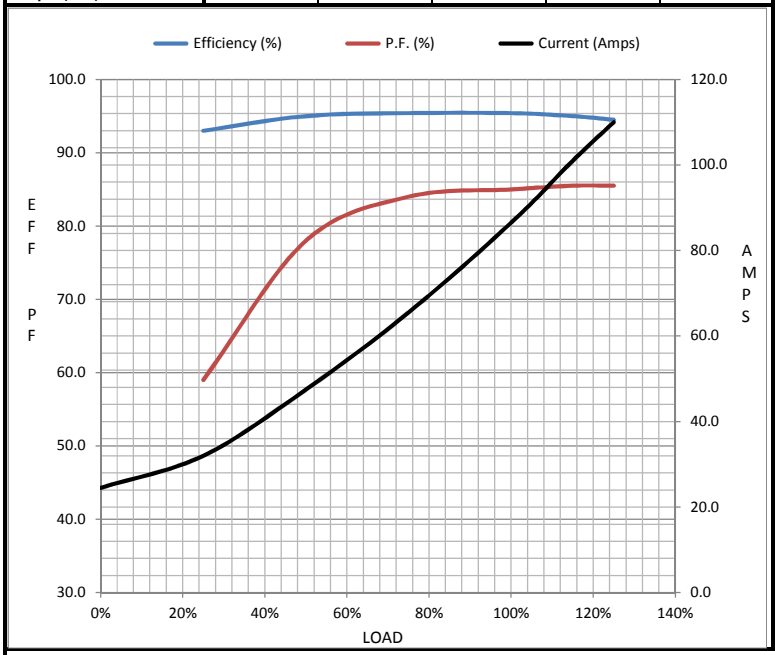

Information Block

HP	75.0
Sync. RPM	1800
Frame	365
Enclosure	TEFC
Construction	TFC
Voltage	230/460#190/380 V
Frequency	60 Hz
Design	B
LR Code letter	G
Service Factor	1.15
Temp Rise @ FL	75 ° C
Duty	CONT
Ambient	40 ° C
Elevation	1,000 feet
Rotor/Shaft wk²	20.5 Lb-Ft²
Ref Wdg	CHT36540003 NONE
Sound Pressure @ 1M	75 dBA
VFD Rating	NONE
Outline Dwg	SS620115
Conn. Diag	EE7308AA
Additional Specifications:	
0	
0	

EQUIV CKT (OHMS / PHASE)

R1	R2	X1	X2	Xm
0.0660	0.0450	0.0420	0.6260	15.9820

Speed -Torque Curve

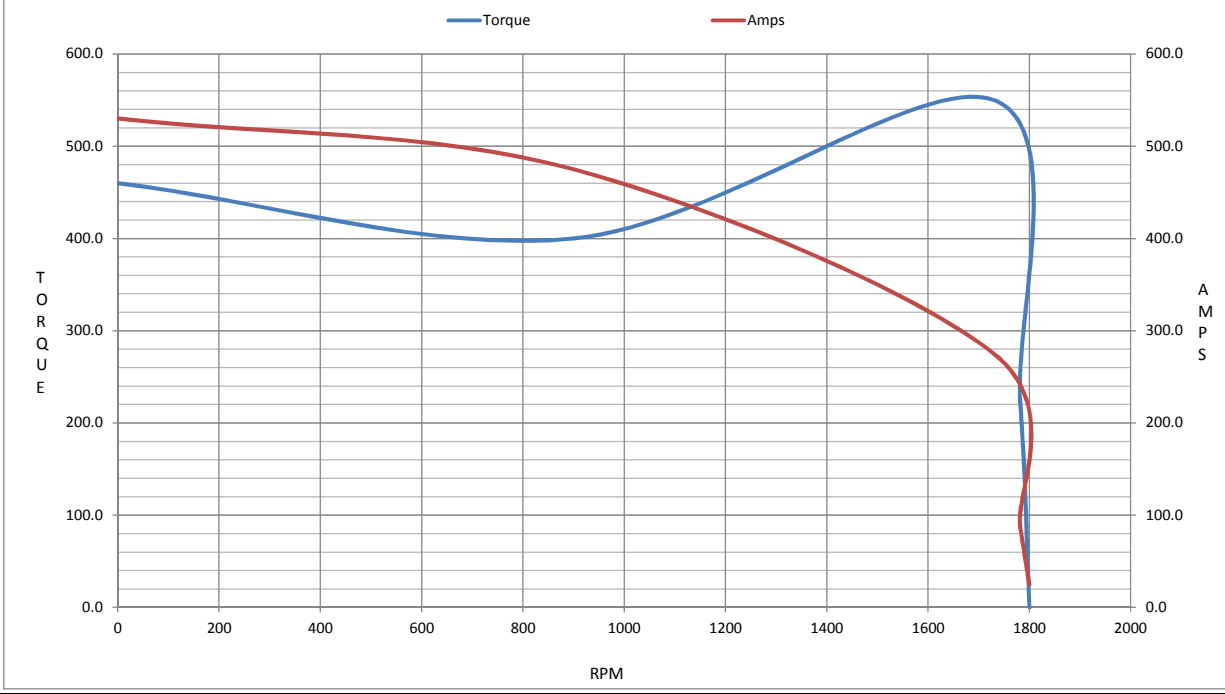

Uncontrolled Copy

CERTIFICATION DATA SHEET

Model#:	365TTFCA6036 AB	**WINDING#:**	CHT36540003 NONE 1
CONN. DIAGRAM:	EE7308AA	**ASSEMBLY:**	F1/F2 CAPABLE
OUTLINE:	SS620115		

TYPICAL MOTOR PERFORMANCE DATA

HP	KW	SYNC. RPM	F.L. RPM	FRAME	ENCLOSURE	KVA CODE	DESIGN
75&60	56&45	1800	1782&1480	365T	TEFC	G	B

PH	Hz	VOLTS	FL AMPS	START TYPE	DUTY	INSL	S.F	AMB°C	ELEVATION
3	60/50	230/460#190/380	173/86.5&166/83	WYE START DELTA RUN	CONTINUOUS	F7	1.15/1.15	40	3300

FULL LOAD EFF: 95.4&95	3/4 LOAD EFF: 95.4	1/2 LOAD EFF: 95	GTD. EFF	ELEC. TYPE	NO LOAD AMPS
FULL LOAD PF: 85&85	**3/4 LOAD PF: 84**	**1/2 LOAD PF: 78**	95	SQ CAGE IND RUN	49 / 24.5

F.L. TORQUE	LOCKED ROTOR AMPS	L.R. TORQUE	B.D. TORQUE	F.L. RISE°C
221 LB-FT	1060 / 530	460 LB-FT 208	550 LB-FT 248	75

SOUND PRESSURE @ 3 FT.	SOUND POWER	ROTOR WK^2	MAX. WK^2	SAFE STALL TIME	STARTS /HOUR	APPROX. MOTOR WGT
75 dBA	85 dBA	20.5 LB-FT^2	- LB-FT^2	20 SEC.	2	1100 LBS.

*** SUPPLEMENTAL INFORMATION ***

DE BRACKET TYPE	ODE BRACKET TYPE	MOUNT TYPE	ORIENTATION	SEVERE DUTY	HAZARDOUS LOCATION	DRIP COVER	SCREENS	PAINT
STANDARD	STANDARD	RIGID	HORIZONTAL	FALSE	NONE	FALSE	NONE	BLUE (ENAMEL)

BEARINGS		GREASE	SHAFT TYPE	SPECIAL DE	SPECIAL ODE	SHAFT MATERIAL	FRAME MATERIAL
DE	OPE						
BALL 6314	BALL 6313	POLYREX EM	T	NONE	NONE	1045 HOT ROLLED (C-204)	CAST IRON

THERMO-PROTECTORS				THERMISTORS	CONTROL	SPACE /n HEATERS
THERMOSTATS	PROTECTORS	WDG RTDs	BRG RTDs			
NONE	NOT	NONE	NONE	NONE	FALSE	NONE VOLTS

If Inverter equals NONE, contact factory for further information

INVERTER TORQUE: NONE
INV. HP SPEED RANGE: NONE

ENCODER: NONE
NONE NONE
NONE NONE PPR

BRAKE: NONE NONE
NONE P/N NONE
NONE NONE
NONE FT-LB NONE V NONE Hz

*
N
O
T
E
S
*

DATE: 06/22/2017 12:41:48 AM
FORM 3531 REV.3 02/07/99
** Subject to change without notice.