ABB BALDOR RELIANCE

Customer information packet

KL3403

.25HP, 1725RPM, 1PH, 60HZ, 56C, 3411L, TEFC, F1
Class - None
Division - Not Applicable

Copyright © All product information within this document is subject to ABB Motors and Mechanical Inc. copyright © protection, unless otherwise noted.
11/5/2026 3:05:43 PM

Specifications

Enclosure	TEFC
Frame	56C
Frame Material	Steel
Frequency	60.00 Hz
Haz Area Class and Group	None
Haz Area Division	Not Applicable
Motor Letter Type	Cap Start, Induction Run
Output @ Frequency	.250 HP @ 60 HZ
Phase	1
Synchronous Speed @ Frequency	1800 RPM @ 60 HZ
Voltage @ Frequency	115.0 V @ 60 HZ
	230.0 V @ 60 HZ
Agency Approvals	C UR US
Ambient Temperature	40 °C
Auxiliary Box	NO AUXILLARY BOX
Auxiliary Box Lead Termination	None
Base Indicator	No Mounting
Bearing Grease Type	Polyrex EM (-20F +300F)
Blower	None
Current @ Voltage	2.500 A @ 230.0 V
	3.000 A @ 208.0 V
	5.000 A @ 115.0 V
Design Code	N
Drip Cover	No Drip Cover
Duty Rating	CONT
Efficiency @ 100% Load	55.0 %
Electrically Isolated Bearing	Not Electrically Isolated
Feedback Device	NO FEEDBACK
Front Face Code	Standard
Front Shaft Indicator	None
Heater Indicator	No Heater
High Voltage Full Load Amps	2.5 a

Part Detail

Revision	AM
Type	AC
Mech. spec.	34C063
Base	
Status	PRD/A
Elec. spec.	34WG5506
Layout	34LYC063
Eff. date	12-30-2024
CD Diagram	CD0001
Poles	04
Leads	6#18
Proprietary	False
Created date	01-01-0001

Insulation Class	B
Inverter Code	Not Inverter
KVA Code	L
Lifting Lugs	No Lifting Lugs
Locked Bearing Indicator	Locked Bearing
Motor Lead Exit	Ko Box
Motor Lead Quantity/Wire Size	6 @ 18 AWG
Motor Lead Termination	Flying Leads
Motor Standards	NEMA
Motor Type	3411L
Mounting Arrangement	F1
Number of Poles	4
Overall Length	11.35 IN
Power Factor	57
Product Family	General Purpose
Pulley End Bearing Type	Ball
Pulley Face Code	C-Face
Pulley Shaft Indicator	Standard
Rodent Screen	None
RoHS Status	ROHS COMPLIANT
Service Factor	1.35
Shaft Diameter	0.625 IN
Shaft Extension Location	Pulley End
Shaft Ground Indicator	No Shaft Grounding
Shaft Rotation	Reversible
Shaft Slinger Indicator	No Slinger
Speed	1725 rpm
Speed Code	Single Speed
Starting Method	Direct on line
Thermal Device - Bearing	None
Thermal Device - Winding	None
Vibration Sensor Indicator	No Vibration Sensor
Winding Thermal 1	None
Winding Thermal 2	None

Nameplate

	NP1256L							
CAT.NO.	KL3403							
SPEC.	34C63-5506							
HP	.25							
VOLTS	115/230							
AMP	5/2.5							
RPM	1725							
FRAME	56C	**HZ**	60			**PH**	1	
SER.F.	1.35	**CODE**	L	**DES**	N	**CLASS**	B	
NEMA-NOM-EFF	55	**PF**	57					
RATING	40C AMB-CONT							
CC								
DE	6203	**ODE**	6203					
ENCL	TEFC	**SN**						
	SFA 5.6/2.8							

AC Induction Motor Performance Data
Record # 6772
Typical performance - not guaranteed values

Winding: 34WG5506-R001	**Type:** 3411L	**Enclosure:** TEFC

Nameplate Data			**230 V, 60 Hz: High Voltage Connection**	
Rated Output (HP)		.25	**Full Load Torque**	0.75 LB-FT
Volts		115/230	**Start Configuration**	direct on line
Full Load Amps		5/2.5	**Breakdown Torque**	2.13 LB-FT
R.P.M.		1725	**Pull-up Torque**	1.88 LB-FT
Hz	60 **Phase**	1	**Locked-rotor Torque**	2.48 LB-FT
NEMA Design Code	N **KVA Code**	L	**Starting Current**	9.95 A
Service Factor (S.F.)		1.35	**No-load Current**	2.2 A
NEMA Nom. Eff.	55 **Power Factor**	57	**Line-line Res. @ 25ºC**	8.88 Ω A Ph 7.06 Ω B Ph
Rating - Duty		40C AMB-CONT	**Temp. Rise @ Rated Load**	57°C
S.F. Amps		5.6/2.8	**Temp. Rise @ S.F. Load**	70°C

Load Characteristics 230 V, 60 Hz, 0.25 HP

% of Rated Load	**25**	**50**	**75**	**100**	**125**	**150**	**S.F.**
Power Factor	32	40	49	57	63	69	67
Efficiency	28	40	50	55	58	59	59
Speed	1779	1763	1740	1720	1700	1670	1680
Line amperes	2.2	2.3	2.4	2.5	2.7	2.9	2.8

ABB Motors and Mechanical Inc.

WINDING # 34WG5506

0.25 HP 1 PH 60 HZ 1725 RPM 230 V 3411L

Typical performance - not guaranteed values.

TORQUES(LB-FT): PO=2.13 PU=1.88 LR=2.48 LRA=9.95

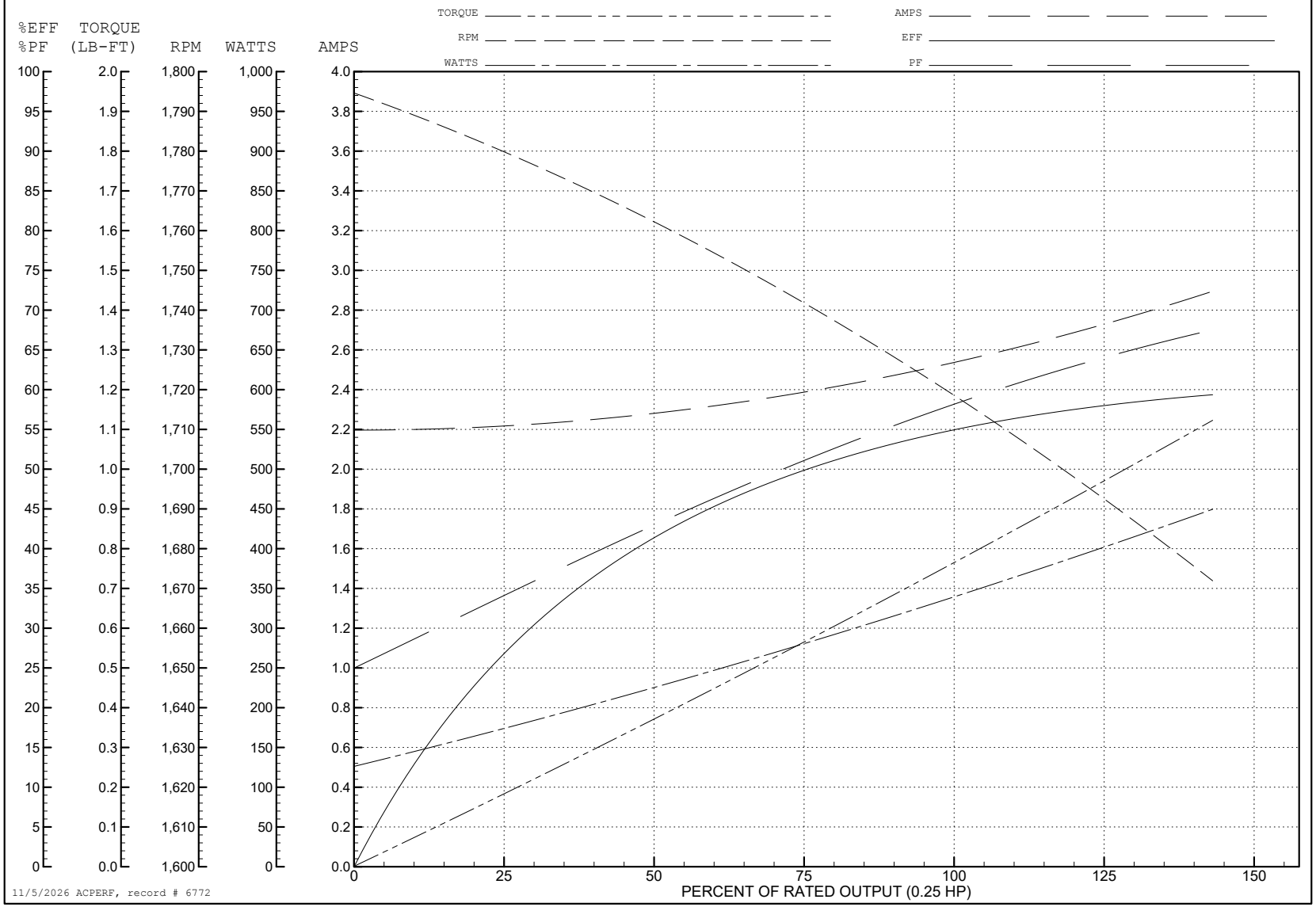

11/5/2026 ACPERF, record # 6772

34LYC063

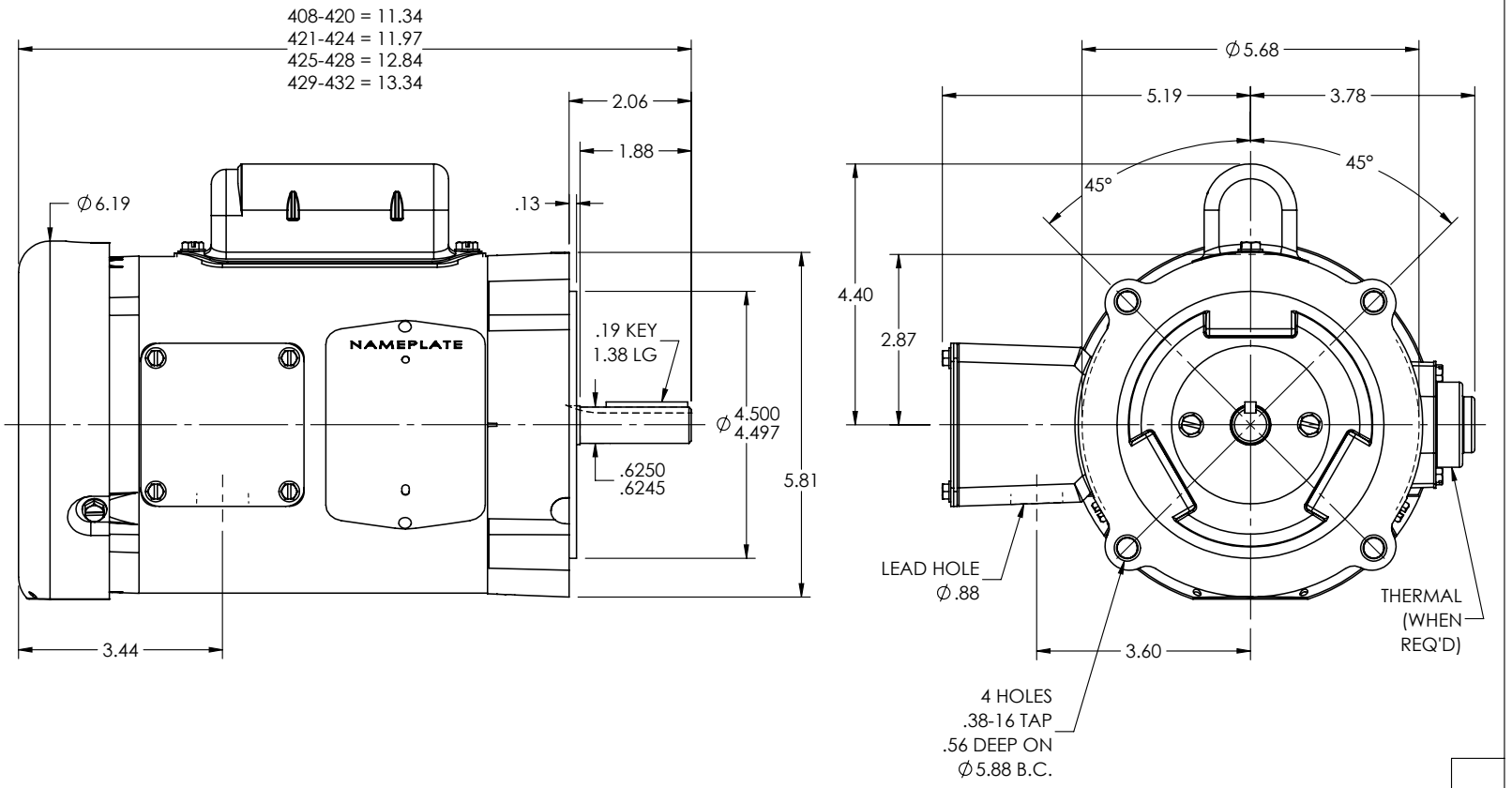

CUSTOMER IS RESPONSIBLE FOR DETERMINING THAT THE PRODUCT WILL PERFORM SUITABLY IN THE INTENDED APPLICATION

REV. DESC: CLEAN UP DIMENSIONING			
REV: P	VERSION: 07	REVISED: 02:08:16 04/14/2025	TDR: 000001253803
34LYC063	MODEL NO. 34LYC063		REF: -
	BY: ENJEFD0		

BALDOR - RELIANCE®

STD VERT 34L NEMA 56C TEFC

34LYC063

CD0001

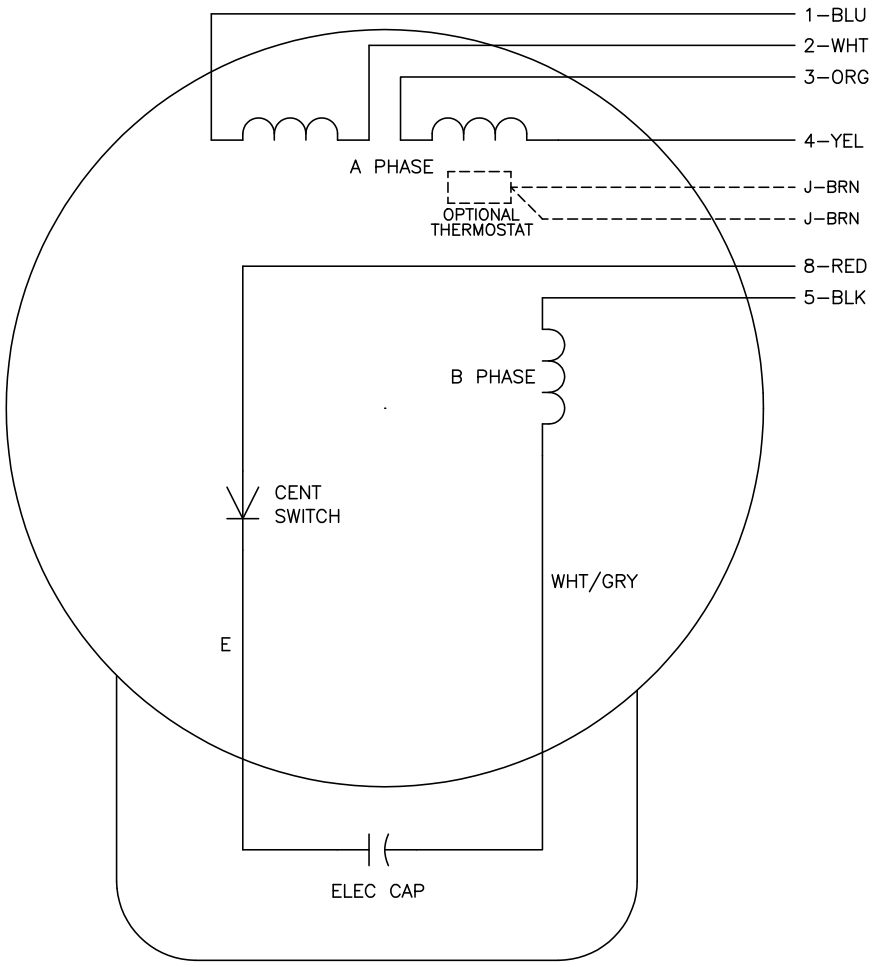

	LINE A	LINE B	JOIN
HIGH STD	1	4,5	2,3,8
HIGH OPP	1	4,8	2,3,5
LOW STD	1,3,8	2,4,5	–
LOW OPP	1,3,5	2,4,8	–

NOTES:

1. STANDARD ROTATION IS CCW FACING END OPPOSITE SHAFT EXTENSION.
2. OPTIONAL THERMOSTAT IS PROVIDED WHEN SPECIFIED.
3. MULTIPLE CAPACITORS ARE CONNECTED IN PARALLEL UNLESS OTHERWISE SPECIFIED.
4. LEAD COLORS ARE OPTIONAL. LEADS MUST ALWAYS BE NUMBERED AS SHOWN.

CD0001

REV. DESC: REVISE TO SHOW OPTIONAL COLORS			BALDOR ELECTRIC Co.
REV. LTR: D	BY: JLP	REVISED: 04/08/99 1:16	TDR: 0178636
CD0001		FILE: AAA00007405	MDL: –
		MTL: –	TYPE L, DV, REV, 6 LEADS