PRODUCT INFORMATION PACKET

Model No: F681V1
Catalog No: F681V1
Fan and Blower Motor, .75 HP, 1 Ph, 60&50 Hz, 115/230 V, 1800 RPM, 56 Frame, DP



Regal and Century are trademarks of Regal Rexnord Corporation or one of its affiliated companies.
©2025 Regal Rexnord Corporation, All Rights Reserved. MC017097E

Nameplate Specifications

Phase	1	Output HP	.75 Hp
Output KW	0.56 kW	Voltage	115/230 V
Speed	1725&1425 rpm	Service Factor	1.25
Frame	56	Enclosure	Drip Proof
Thermal Protection	Thermally Protected	Ambient Temperature	40 °C
Frequency	60&50 Hz	Current	9.6/4.8&10.4/5.2 A
Duty	Continuous	Insulation Class	B
UL	Recognized	CSA	Y
CE	Y	Number of Speeds	1

Technical Specifications

Electrical Type	Split Phase	Starting Method	Across The Line
Poles	4	Rotation	Selective Counterclockwise
Mounting	Resilient Base	Drive End Bearing	Ball
Opp Drive End Bearing	Ball	Frame Material	Rolled Steel
Shaft Type	NEMA 56	Overall Length	12.04 in
Frame Length	5.50 in	Shaft Diameter	0.625 in
Shaft Extension	1.95 in		
Outline Drawing	OL56100106-001	Connection Drawing	CDSD113

This is an uncontrolled document once printed or downloaded and is subject to change without notice. Date Created:05/22/2025

Uncontrolled Copy

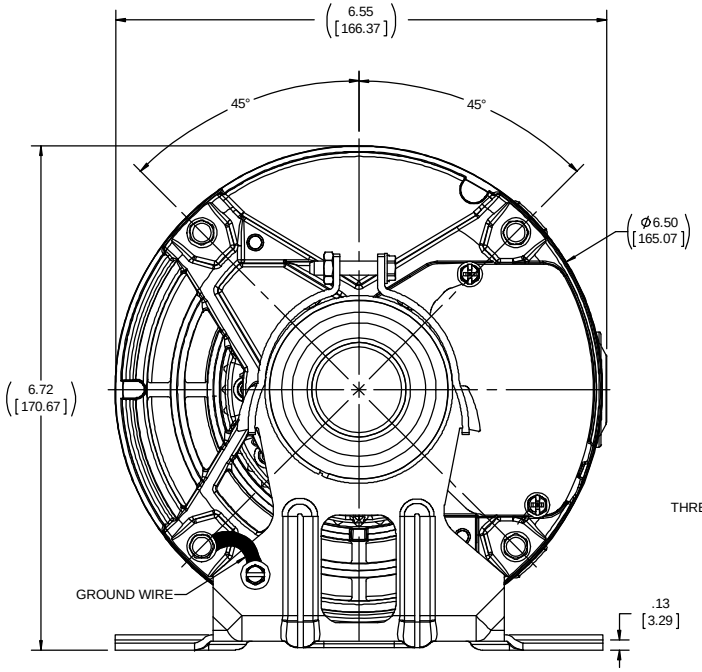

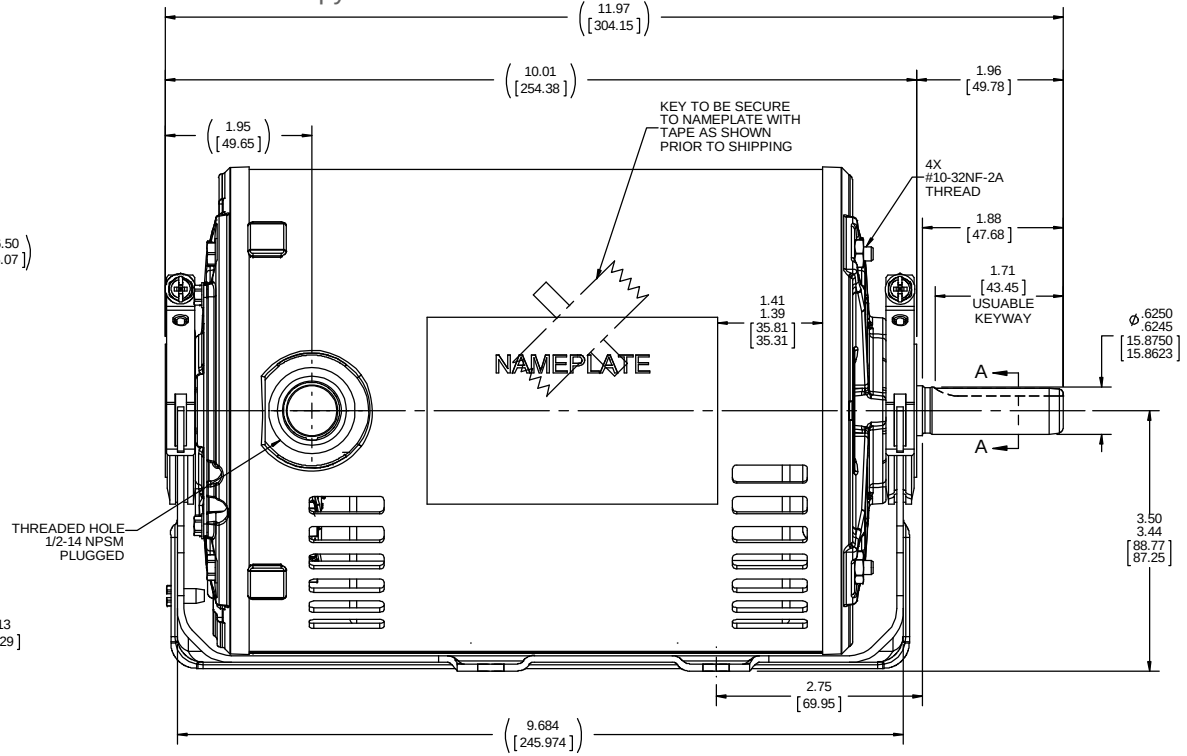

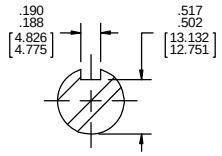

SECTION A-A

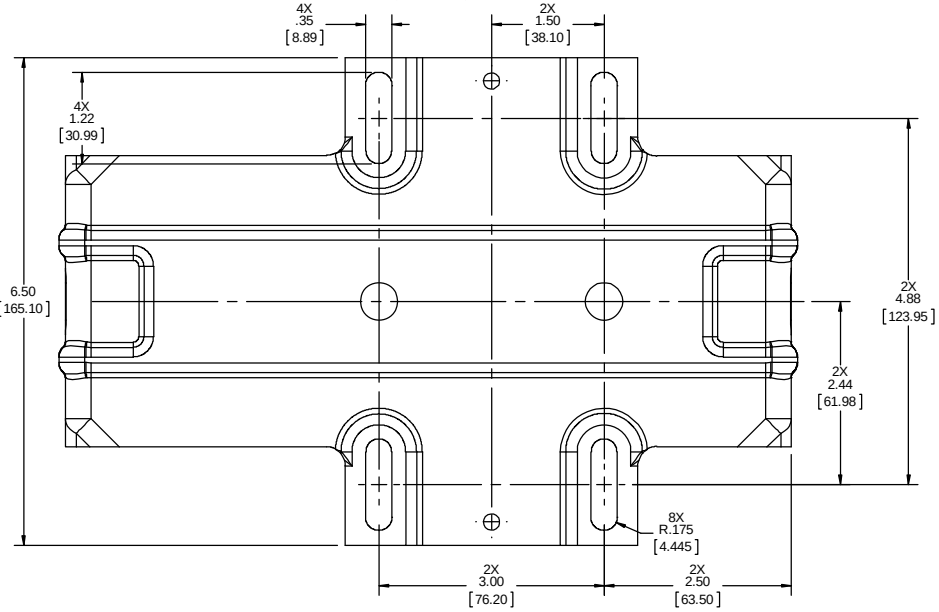

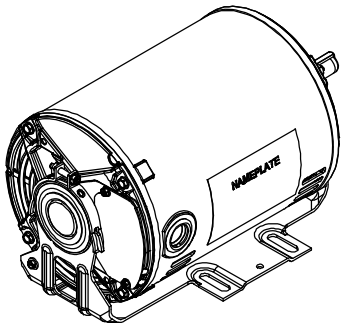

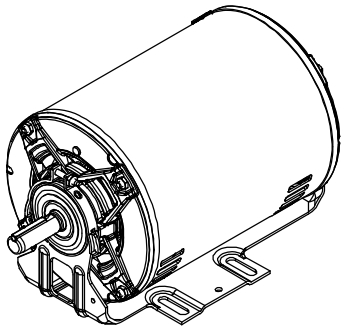

DRAWING REVISION: B	REVISION BY: SHESHI	DATE: 01/10/2019
ECO: ECO-0159763	APPROVED BY: D.SURYAWANSHI	DATE: 01/10/2019
ECO DESCRIPTION: UPDATED MOTOR ASSY		

COPYRIGHT REGAL BELOIT AMERICA, INC. ALL RIGHTS RESERVED.
PROPRIETARY AND CONFIDENTIAL INFORMATION - THIS DOCUMENT IS THE PROPERTY OF REGAL BELOIT AMERICA, INC. ("OWNER") AND CONTAINS OWNER'S PROPRIETARY INFORMATION. ANY PERSON, CORPORATION OR OTHER FIRM RECEIVING IT IS DEEMED, BY RECEIVING IT, TO AGREE THAT IT, AND/OR ANY PART OF IT, SHALL NOT BE DISCLOSED TO ANY PERSON, CORPORATION OR OTHER ENTITY, DUPLICATED, AND/OR USED, EXCEPT AS EXPRESSLY APPROVED IN WRITING IN ADVANCE BY OWNER. THIS DOCUMENT SHALL BE RETURNED TO OWNER UPON REQUEST. IT MAY BE SUBJECT TO CERTAIN RESTRICTIONS UNDER APPLICABLE EXPORT CONTROL LAWS AND REGULATIONS.

TOLERANCES UNLESS OTHERWISE SPECIFIED:

DEC.	INCH	mm	ANGLE
.X	±0.1	[±2.5]	±0.5°
.XX	±0.03	[±0.76]	
.XXX	±0.005	[±0.127]	
.XXXX	±0.0005	[±0.0127]	

REMOVE BURRS & BREAK SHARP EDGES: .003/.015 [.076/.381] X 45°
CORNER FILLETS: R.02 [.51]
MACHINED SURFACES: 125/ INCH 3.2/ mm
mm SHOWN IN [BRACKETS]

DRAWN BY: J.RUIZ	
DATE: 06-10-2016	
APPROVED BY: J.ORTEGA	
DATE: 06-10-2016	
REFERENCE: F681	
THIRD ANGLE PROJECTION	

Regal Beloit America, Inc.

DESCRIPTION: OUTLINE
56FR,DP,1-PHASE

MATERIAL | PROCESS/FINISH

SIZE	DRAWING NUMBER	SHEET
C	OL56100106-001	1 OF1

Uncontrolled Copy

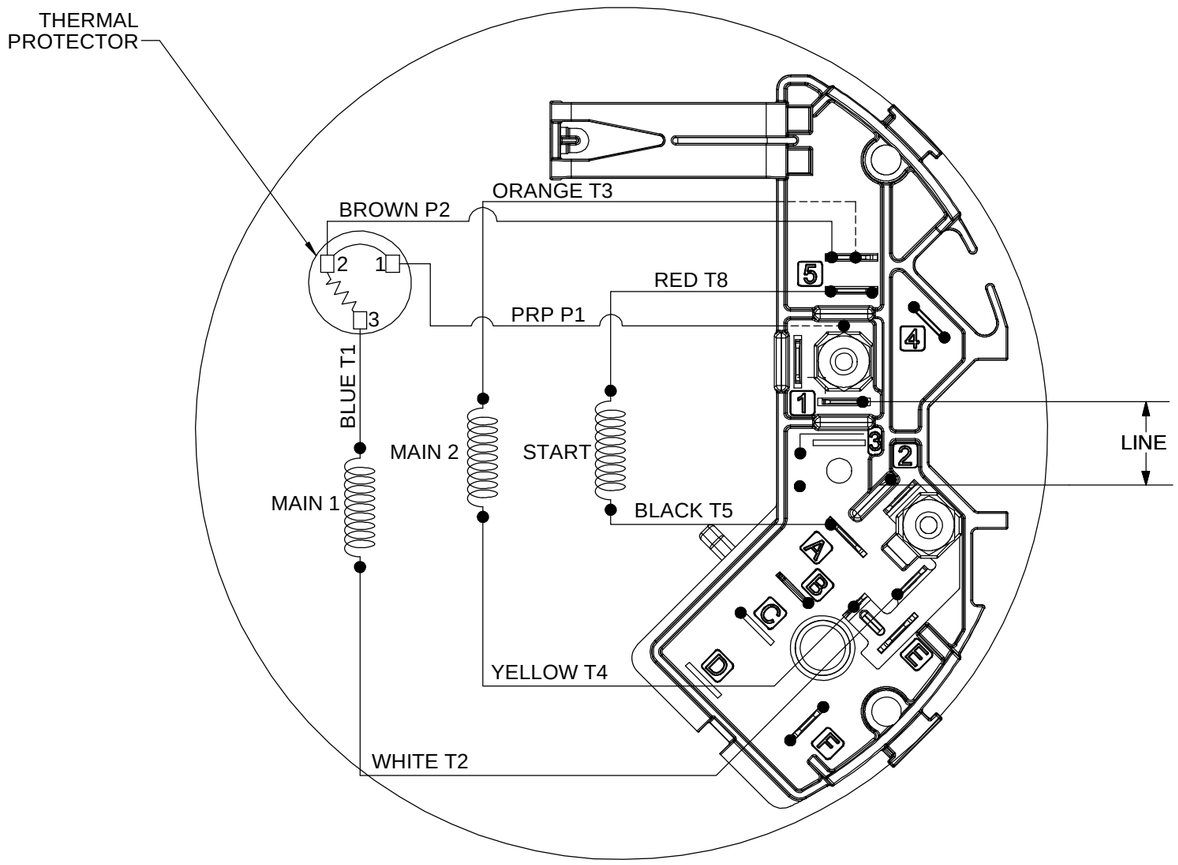

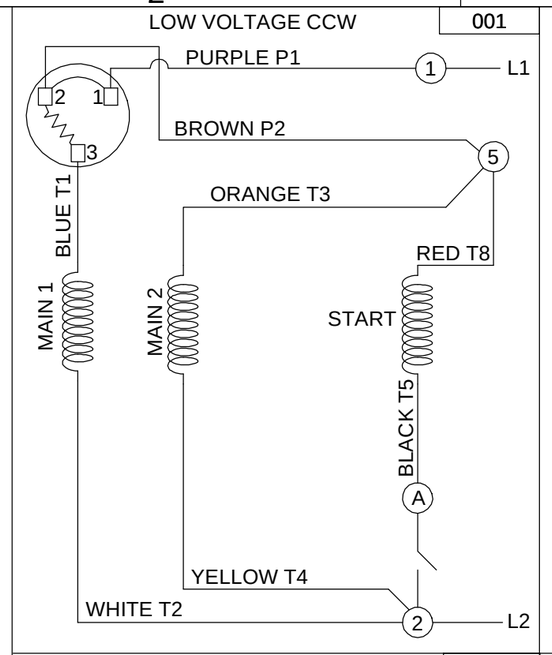

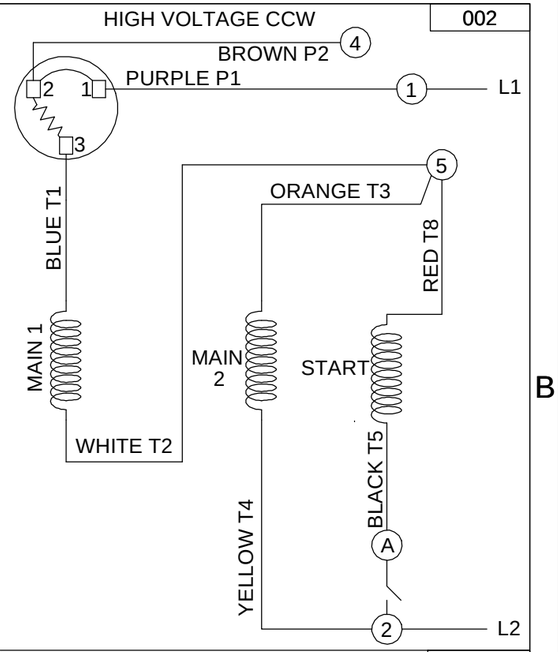

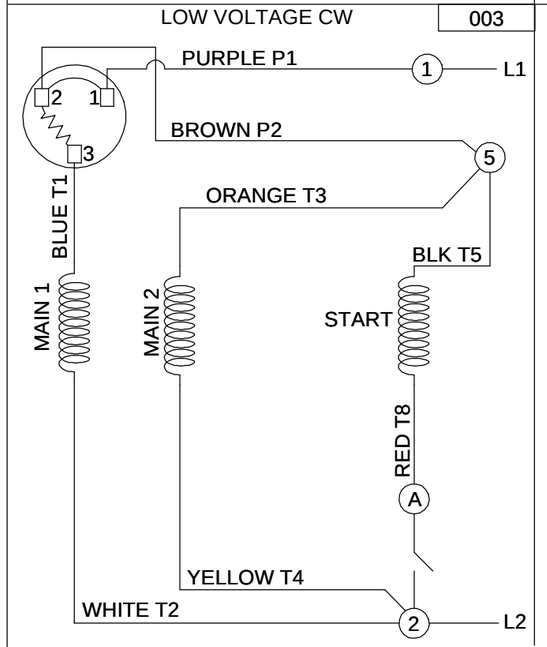

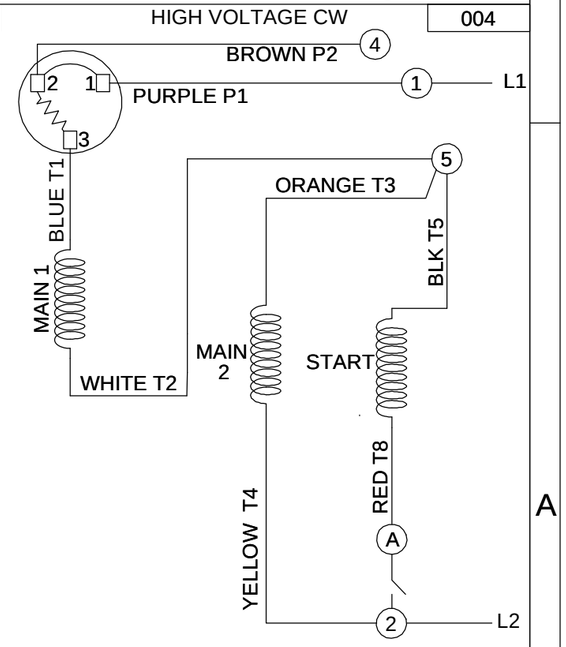

NOTES:
1. FOR HI VOLTAGE REMOVE BROWN P2 FROM TERMINAL #5 AND PLACE ON TERMINAL #4. REMOVE WHITE T2 FROM TERMINAL #2 AND PLACE ON TERMINAL #5.
2. TO REVERSE ROTATION, INTERCHANGE RED T8 AND BLACK T5.
3. TERMINAL BOARD ASSY: 10003285-001-001.
4. CONN DIAGRAM-NAMEPLATE DD10111-001.

DRAWING REVISION: B	REVISION BY: D.SURYAWANSHI	DATE: 06/29/2018
ECO: ECO-0147976	APPROVED BY: CD	DATE: 06/29/2018
ECO DESCRIPTION: POST 2 WAS E AND UPDAED NOTE 3.		

COPYRIGHT REGAL BELOIT AMERICA, INC. ALL RIGHTS RESERVED.
PROPRIETARY AND CONFIDENTIAL INFORMATION - THIS DOCUMENT IS THE PROPERTY OF REGAL BELOIT AMERICA, INC. ("OWNER") AND CONTAINS OWNER'S PROPRIETARY INFORMATION. ANY PERSON, CORPORATION OR OTHER FIRM RECEIVING IT IS DEEMED, BY RECEIVING IT, TO AGREE THAT IT, AND/OR ANY PART OF IT, SHALL NOT BE DISCLOSED TO ANY PERSON, CORPORATION OR OTHER ENTITY, DUPLICATED, AND/OR USED, EXCEPT AS EXPRESSLY APPROVED IN WRITING IN ADVANCE BY OWNER. THIS DOCUMENT SHALL BE RETURNED TO OWNER UPON REQUEST. IT MAY BE SUBJECT TO CERTAIN RESTRICTIONS UNDER APPLICABLE EXPORT CONTROL LAWS AND REGULATIONS.

TOLERANCES UNLESS OTHERWISE SPECIFIED:

DEC.	INCH	mm	ANGLE
.X	±0.1	[±2.5]	±0.5°
.XX	±0.01	[±0.25]	
XXX	±0.005	[±0.127]	
.XXXX	±0.0005	[±0.0127]	

REMOVE BURRS & BREAK SHARP EDGES: .003/.015 [.076/.381] X 45 °
CORNER FILLETS: R.02 [.51]
MACHINED SURFACES: 125 / 3.2 / INCH / mm
mm SHOWN IN [BRACKETS]

DRAWN BY: G. RODRIGUEZ	
DATE: 02-13-2018	
APPROVED BY: R. GRAJEDA	
DATE: 02-13-2018	
REFERENCE	MATERIAL / PROCESS/FINISH
THIRD ANGLE PROJECTION	SIZE: B / DRAWING NUMBER: CDSD113 / SHEET: 1 OF 1

REGAL™ Regal Beloit America, Inc.

DESCRIPTION: CONN DIAGRAM-EXTERNAL