ABB BALDOR RELIANCE

Customer information packet

L3408

.5HP, 3450RPM, 1PH, 60HZ, 48, 3413L, TEFC, F1
Class - None
Division - Not Applicable

Copyright © All product information within this document is subject to ABB Motors and Mechanical Inc. copyright © protection, unless otherwise noted.
11/5/2026 5:29:04 PM

Specifications

Enclosure	TEFC
Frame	48
Frame Material	Steel
Frequency	60.00 Hz
Haz Area Class and Group	None
Haz Area Division	Not Applicable
Motor Letter Type	Cap Start, Induction Run
Output @ Frequency	.500 HP @ 60 HZ
Phase	1
Synchronous Speed @ Frequency	3600 RPM @ 60 HZ
Voltage @ Frequency	115.0 V @ 60 HZ
	230.0 V @ 60 HZ
Agency Approvals	C UR US
Ambient Temperature	40 °C
Auxiliary Box	NO AUXILLARY BOX
Auxiliary Box Lead Termination	None
Base Indicator	Rigid
Bearing Grease Type	Polyrex EM (-20F +300F)
Blower	None
Current @ Voltage	3.500 A @ 230.0 V
	4.100 A @ 208.0 V
	7.000 A @ 115.0 V
Design Code	N
Drip Cover	No Drip Cover
Duty Rating	CONT
Efficiency @ 100% Load	66.0 %
Electrically Isolated Bearing	Not Electrically Isolated
Feedback Device	NO FEEDBACK
Front Face Code	Standard
Front Shaft Indicator	None
Heater Indicator	No Heater
High Voltage Full Load Amps	3.5 a

Part Detail

Revision	T
Type	AC
Mech. spec.	34H640
Base	
Status	PRD/A
Elec. spec.	34WGX716
Layout	34LYH640
Eff. date	10-25-2024
CD Diagram	CD0001
Poles	02
Leads	6#18
Proprietary	False
Created date	01-01-0001

Insulation Class	B
Inverter Code	Not Inverter
KVA Code	L
Lifting Lugs	No Lifting Lugs
Locked Bearing Indicator	No Locked Bearing
Motor Lead Exit	Ko Box
Motor Lead Quantity/Wire Size	6 @ 18 AWG
Motor Lead Termination	Flying Leads
Motor Standards	NEMA
Motor Type	3413L
Mounting Arrangement	F1
Number of Poles	2
Overall Length	10.73 IN
Power Factor	72
Product Family	General Purpose
Pulley End Bearing Type	Ball
Pulley Face Code	Standard
Pulley Shaft Indicator	Standard
Rodent Screen	None
RoHS Status	ROHS COMPLIANT
Service Factor	1.25
Shaft Diameter	0.500 IN
Shaft Extension Location	Pulley End
Shaft Ground Indicator	No Shaft Grounding
Shaft Rotation	Reversible
Shaft Slinger Indicator	No Slinger
Speed	3450 rpm
Speed Code	Single Speed
Starting Method	Direct on line
Thermal Device - Bearing	None
Thermal Device - Winding	None
Vibration Sensor Indicator	No Vibration Sensor
Winding Thermal 1	None
Winding Thermal 2	None

Nameplate

NP1256L									
CAT.NO.	L3408								
SPEC.	34H640X716								
HP	.5								
VOLTS	115/230								
AMP	7/3.5								
RPM	3450								
FRAME	48	**HZ**	60			**PH**	1		
SER.F.	1.25	**CODE**	L	**DES**	N	**CLASS**	B		
NEMA-NOM-EFF	66	**PF**	72						
RATING	40C AMB-CONT								
CC									
DE	6203	**ODE**	6203						
ENCL	TEFC	**SN**							
	SFA 8/4								

Accessories

Part number	Description	Multiplier
34-3900T	C-FACE KIT	A8

AC Induction Motor Performance Data
Record # 7566
Typical performance - not guaranteed values

Winding: 34WGX716-R001	**Type:** 3413L	**Enclosure:** TEFC

Nameplate Data			**230 V, 60 Hz: High Voltage Connection**	
Rated Output (HP)		.5	**Full Load Torque**	0.75 LB-FT
Volts		115/230	**Start Configuration**	direct on line
Full Load Amps		7/3.5	**Breakdown Torque**	2.3 LB-FT
R.P.M.		3450	**Pull-up Torque**	2 LB-FT
Hz	60 **Phase**	1	**Locked-rotor Torque**	2.2 LB-FT
NEMA Design Code	N **KVA Code**	L	**Starting Current**	21 A
Service Factor (S.F.)		1.25	**No-load Current**	2.76 A
NEMA Nom. Eff.	66 **Power Factor**	72	**Line-line Res. @ 25ºC**	4.163 Ω A Ph 4.624 Ω B Ph
Rating - Duty		40C AMB-CONT	**Temp. Rise @ Rated Load**	67°C
S.F. Amps		8/4	**Temp. Rise @ S.F. Load**	84°C

Load Characteristics 230 V, 60 Hz, 0.5 HP

% of Rated Load	**25**	**50**	**75**	**100**	**125**	**150**	**S.F.**
Power Factor	29	48	60	69	76	78	76
Efficiency	50.7	58.5	64.8	66.2	65.8	64.6	65.8
Speed	3548	3520	3489	3449	3405	3346	3405
Line amperes	2.78	2.88	3.13	3.5	3.95	4.64	3.95

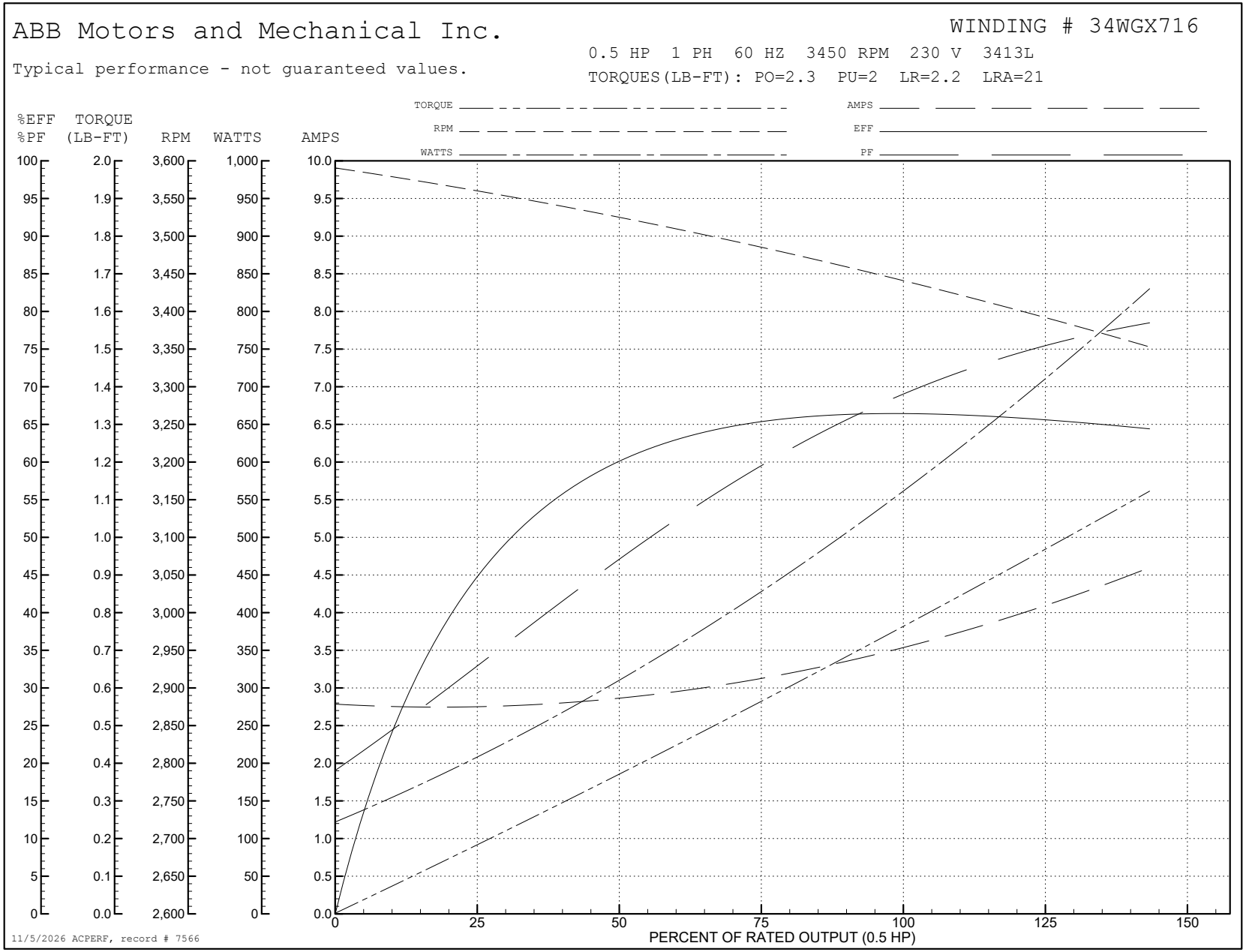
ABB Motors and Mechanical Inc.
WINDING # 34WGX716
Typical performance - not guaranteed values.
0.5 HP 1 PH 60 HZ 3450 RPM 230 V 3413L
TORQUES(LB-FT): PO=2.3 PU=2 LR=2.2 LRA=21
TORQUE
RPM
WATTS
AMPS
EFF
PF
%EFF %PF
TORQUE (LB-FT)
RPM
WATTS
AMPS
PERCENT OF RATED OUTPUT (0.5 HP)
11/5/2026 ACPERF, record # 7566

AC Induction Motor Performance Data
Record # 95820
Typical performance - not guaranteed values

Winding: 34WGX716-R001	**Type:** 3413L	**Enclosure:** TEFC

Nameplate Data				**115 V, 60 Hz: Low Voltage Connection**	
Rated Output (HP)			.5	**Full Load Torque**	0.75 LB-FT
Volts			115/230	**Start Configuration**	direct on line
Full Load Amps			7/3.5	**Breakdown Torque**	2.3 LB-FT
R.P.M.			3450	**Pull-up Torque**	2 LB-FT
Hz	60	**Phase**	1	**Locked-rotor Torque**	2.2 LB-FT
NEMA Design Code	N	**KVA Code**	L	**Starting Current**	42 A
Service Factor (S.F.)			1.25	**No-load Current**	5.52 A
NEMA Nom. Eff.	66	**Power Factor**	72	**Line-line Res. @ 25ºC**	1.01 Ω A Ph 4.65 Ω B Ph
Rating - Duty			40C AMB-CONT	**Temp. Rise @ Rated Load**	67°C
S.F. Amps			8/4	**Temp. Rise @ S.F. Load**	77°C
				Locked-rotor Power Factor	90.1
				Rotor inertia	0.0121 lb-ft²

Load Characteristics 115 V, 60 Hz, 0.5 HP

% of Rated Load	**25**	**50**	**75**	**100**	**125**	**150**	**S.F.**
Power Factor	29	48	60	69	76	78	76
Efficiency	51	58	65	66	66	64	66
Speed	3548	3520	3489	3449	3405	3346	3405
Line amperes	5.56	5.76	6.26	7	7.9	9.28	7.9

ABB Motors and Mechanical Inc.

WINDING # 34WGX716

Typical performance - not guaranteed values.

0.5 HP 1 PH 60 HZ 3450 RPM 115 V 3413L

TORQUES(LB-FT): PO=2.3 PU=2 LR=2.2 LRA=42

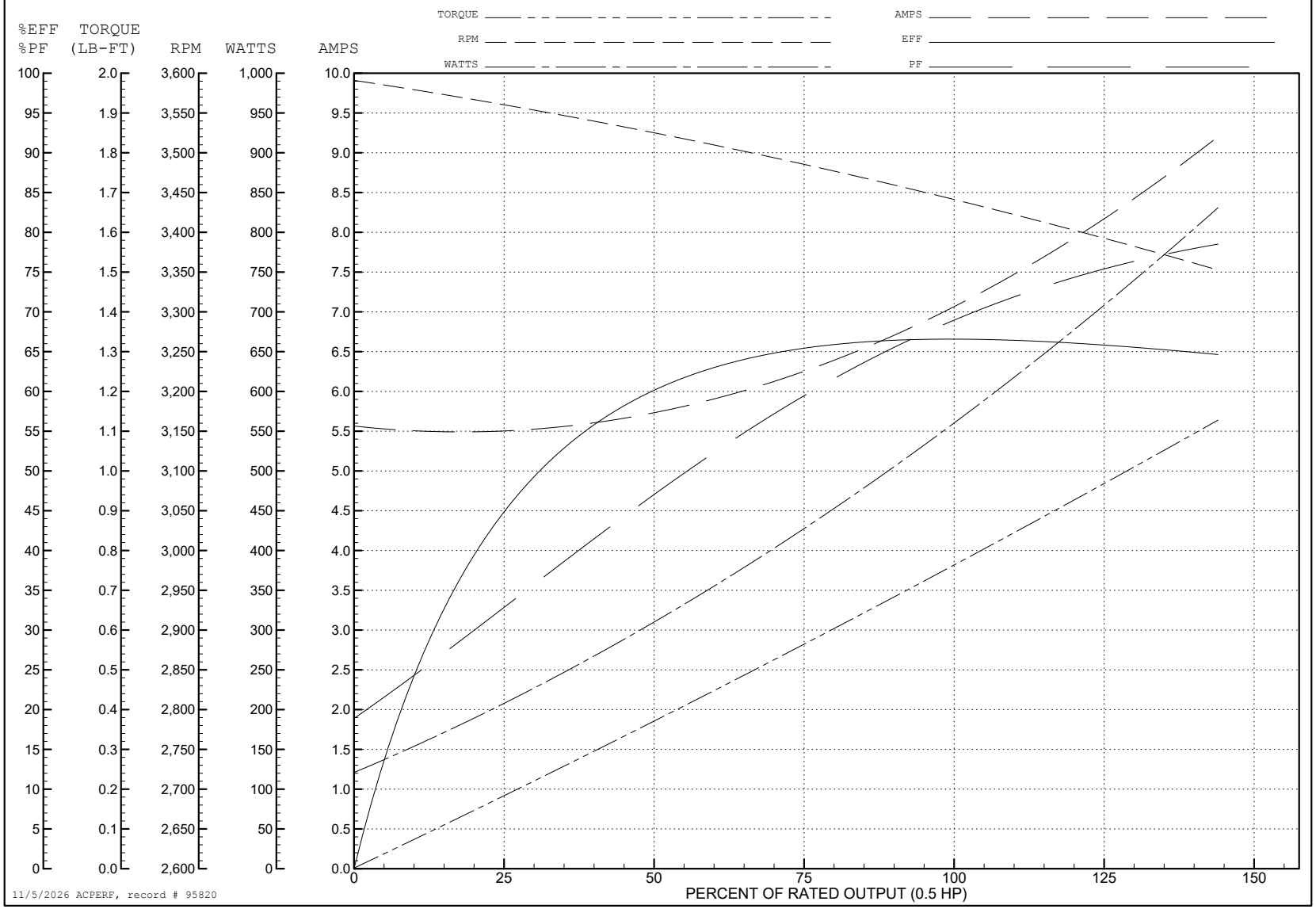

11/5/2026 ACPERF, record # 95820

34LYH640

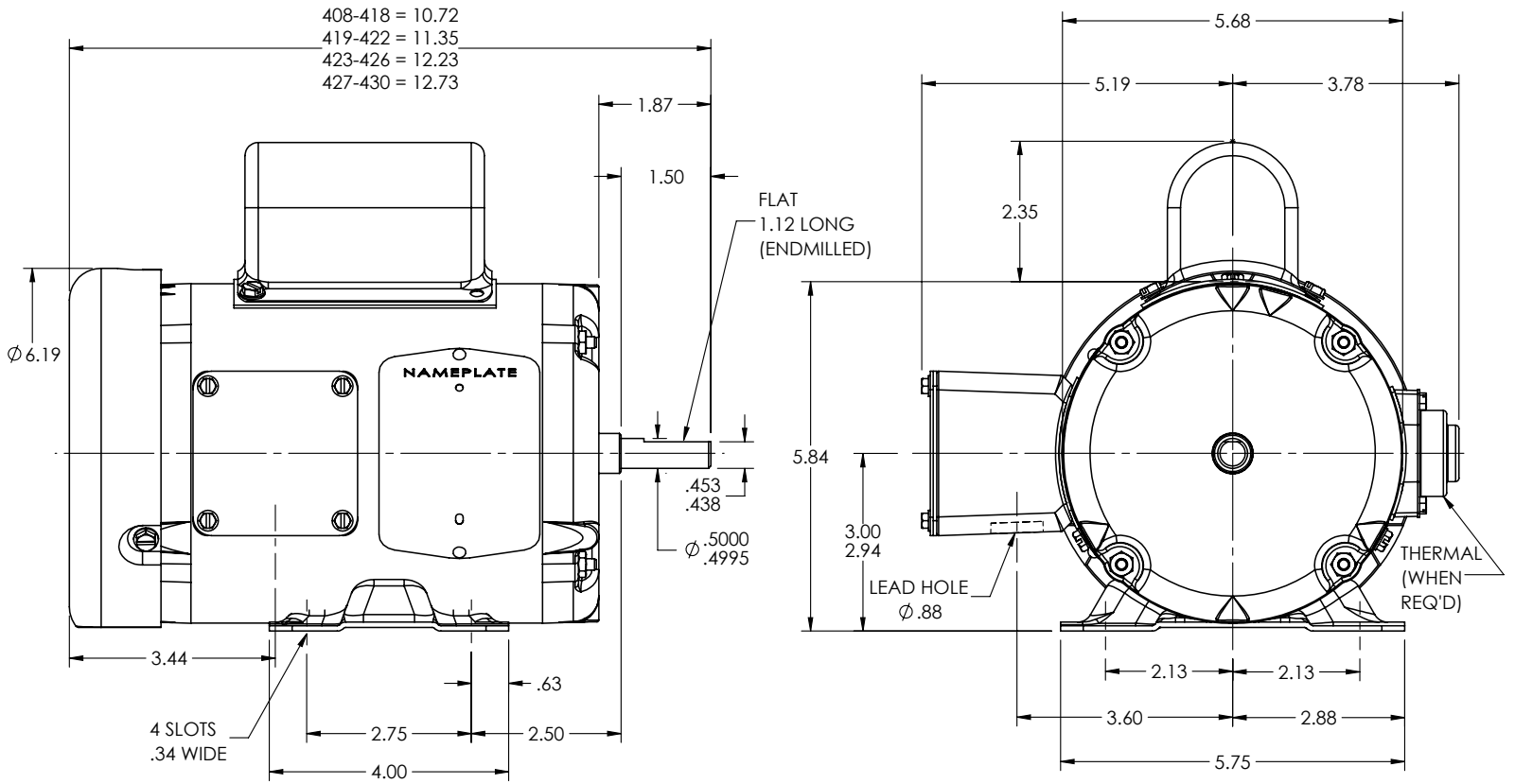

34LYH640

CUSTOMER IS RESPONSIBLE FOR DETERMINING THAT THE PRODUCT WILL PERFORM SUITABLY IN THE INTENDED APPLICATION

REV. DESC: LOAD TO SOLIDWORKS			
REV: D	VERSION: 03	REVISED: 10:27:10 04/24/2023	TDR: 000001194274
34LYH640	MODEL NO. 34LYH640		REF: -
	BY: ENFRAJ0		

BALDOR - RELIANCE®

STD HORZ 34L NEMA 48 TEFC W/33 CAPAC BOX AND 3 PH ER

CD0001

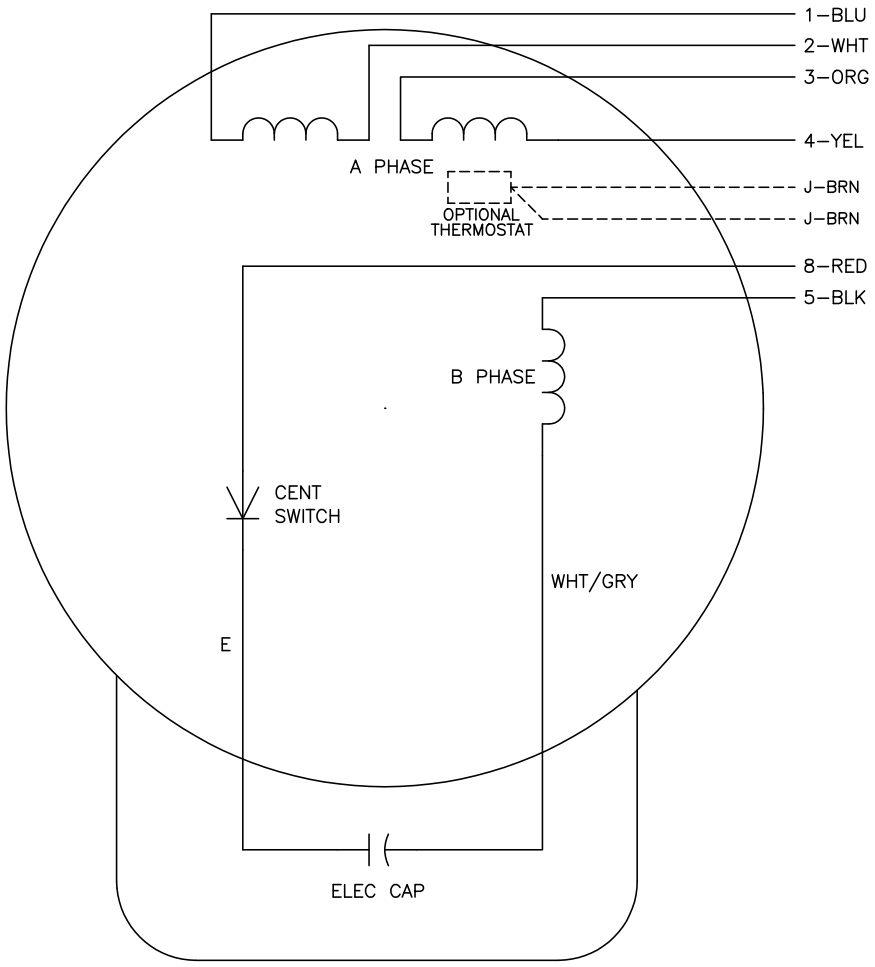

	LINE A	LINE B	JOIN
HIGH STD	1	4,5	2,3,8
HIGH OPP	1	4,8	2,3,5
LOW STD	1,3,8	2,4,5	–
LOW OPP	1,3,5	2,4,8	–

NOTES:

1. STANDARD ROTATION IS CCW FACING END OPPOSITE SHAFT EXTENSION.
2. OPTIONAL THERMOSTAT IS PROVIDED WHEN SPECIFIED.
3. MULTIPLE CAPACITORS ARE CONNECTED IN PARALLEL UNLESS OTHERWISE SPECIFIED.
4. LEAD COLORS ARE OPTIONAL. LEADS MUST ALWAYS BE NUMBERED AS SHOWN.

CD0001

REV. DESC: REVISE TO SHOW OPTIONAL COLORS			BALDOR ELECTRIC Co.
REV. LTR: D	BY: JLP	REVISED: 04/08/99 1:16	TDR: 0178636
CD0001		FILE: AAA00007405	MDL: –
		MTL: –	TYPE L, DV, REV, 6 LEADS