ABB BALDOR RELIANCE

Customer information packet

VFSWDM3611T-E

3HP, 1760RPM, 3PH, 60HZ, 182TC, 3636M, TEFC, F1
Class - None
Division - Not Applicable

Copyright © All product information within this document is subject to ABB Motors and Mechanical Inc. copyright © protection, unless otherwise noted.
11/5/2026 12:09:42 PM

Specifications

Enclosure	TEFC
Frame	182TC
Frame Material	Stainless Steel
Frequency	60.00 Hz
Haz Area Class and Group	None
Haz Area Division	Not Applicable
Motor Letter Type	Three Phase
Output @ Frequency	3.000 HP @ 60 HZ
Phase	3
Synchronous Speed @ Frequency	1800 RPM @ 60 HZ
Voltage @ Frequency	460.0 V @ 60 HZ
	230.0 V @ 60 HZ
Agency Approvals	CSA
	NEMA PREMIUM
	UR
Ambient Temperature	40 °C
Auxiliary Box	NO AUXILLARY BOX
Auxiliary Box Lead Termination	None
Base Indicator	No Mounting
Bearing Grease Type	Polyrex EM (-20F +300F)
Blower	None
Current @ Voltage	8.400 A @ 230.0 V
	8.800 A @ 208.0 V
	4.200 A @ 460.0 V
Design Code	B
Drip Cover	No Drip Cover
Duty Rating	CONT
Efficiency @ 100% Load	89.5 %
Electrically Isolated Bearing	Not Electrically Isolated
Feedback Device	NO FEEDBACK
Front Face Code	Standard
Front Shaft Indicator	None

Part Detail

Revision	S
Type	AC
Mech. spec.	36R533
Base	
Status	PRD/A
Elec. spec.	36WGS987
Layout	36LYR533
Eff. date	08-11-2026
CD Diagram	CD0005
Poles	04
Leads	9#16
Proprietary	False
Created date	07-11-2017

Heater Indicator	No Heater
High Voltage Full Load Amps	4.2 a
Insulation Class	H
Inverter Code	Inverter Ready
KVA Code	K
Lifting Lugs	Standard Lifting Lugs
Locked Bearing Indicator	Locked Bearing
Motor Lead Exit	Ko Box
Motor Lead Quantity/Wire Size	9 @ 16 AWG
Motor Lead Termination	Flying Leads
Motor Standards	NEMA
Motor Type	3636M
Mounting Arrangement	F1
Number of Poles	4
Overall Length	18.89 IN
Power Factor	76
Product Family	WD All SS Encapsulated
Pulley End Bearing Type	Sealed Bearing
Pulley Face Code	C-Face
Pulley Shaft Indicator	Standard
Rodent Screen	None
RoHS Status	ROHS COMPLIANT
Service Factor	1.15
Shaft Diameter	1.125 IN
Shaft Extension Location	Pulley End
Shaft Ground Indicator	No Shaft Grounding
Shaft Rotation	Reversible
Shaft Slinger Indicator	Shaft Slinger
Speed	1760 rpm
Speed Code	Single Speed
Starting Method	Direct on line
Thermal Device - Bearing	None
Thermal Device - Winding	None
Vibration Sensor Indicator	No Vibration Sensor

Winding Thermal 1	None
Winding Thermal 2	None

Nameplate

NP4427AAA01												
CAT #	VFSWDM3611T-E			**WT**	86	**LBS**						
SPEC	36R533S987G1			**ENCL**	TEFC							
SER #				**CC**	010A	**IP**	69					
HP	3			**MAG CUR**	4.5/2.25							
VOLTS	230/460					**NEMA NOM. EFF**	89.5					
AMPS	8.4/4.2					**PF**	76					
RATING	40C AMB-CONT											
RPM	1760				**MAX RPM**	2700						
FRAME	182TC	**HZ**	60	**CODE**	K	**CLASS**	H					
SER.F.	1.15	**SF AMP**	9.4/4.7			**PH**	3	**DES**	B			
DE	6206			**ODE**	6206							
LUBRICATION	POLYREX EM											
ID LOGO	**INVERTER TYPE**			**VPWM**		**CHP**	60	**TO**	90		1.5:1	
ID LOGO	**WK2**	0.372	**CT**	3	**TO**	60		20:1				
ID LOGO	**SL HZ**	1.3	**VT**	0-	**TO**	60		1000:1				
						QR						
YR												

AC Induction Motor Performance Data
Record # 39149
Typical performance - not guaranteed values

Winding: 36WGS987-R001	**Type:** 3636M	**Enclosure:** TEFC

Nameplate Data				**460 V, 60 Hz: Single Voltage Motor**	
Rated Output (HP)			3	**Full Load Torque**	9.04 LB-FT
Volts			230/460	**Start Configuration**	direct on line
Full Load Amps			8.4/4.2	**Breakdown Torque**	34.81 LB-FT
R.P.M.			1760	**Pull-up Torque**	18.62 LB-FT
Hz	60	**Phase**	3	**Locked-rotor Torque**	21.9 LB-FT
NEMA Design Code	B	**KVA Code**	K	**Starting Current**	34.1 A
Service Factor (S.F.)			1.15	**No-load Current**	2.25 A
NEMA Nom. Eff.	89.5	**Power Factor**	76	**Line-line Res. @ 25ºC**	3.58 Ω
Rating - Duty			40C AMB-CONT	**Temp. Rise @ Rated Load**	62°C
S.F. Amps				**Temp. Rise @ S.F. Load**	74°C
				Locked-rotor Power Factor	41
				Rotor inertia	0.335 LB-FT2

Load Characteristics 460 V, 60 Hz, 3 HP

% of Rated Load	**25**	**50**	**75**	**100**	**125**	**150**	**S.F.**
Power Factor	36	57	69	76	80	83	78
Efficiency	82	88	89.6	89.8	89.2	88.3	89.3
Speed	1790	1781	1772	1762	1751	1738	1755
Line amperes	2.45	2.86	3.46	4.17	4.95	5.83	4.65

ABB Motors and Mechanical Inc.

WINDING # 36WGS987

3 HP 3 PH 60 HZ 1760 RPM 460 V 3636M

Typical performance - not guaranteed values.

TORQUES(LB-FT): PO=34.81 PU=18.62 LR=21.9 LRA=34.1

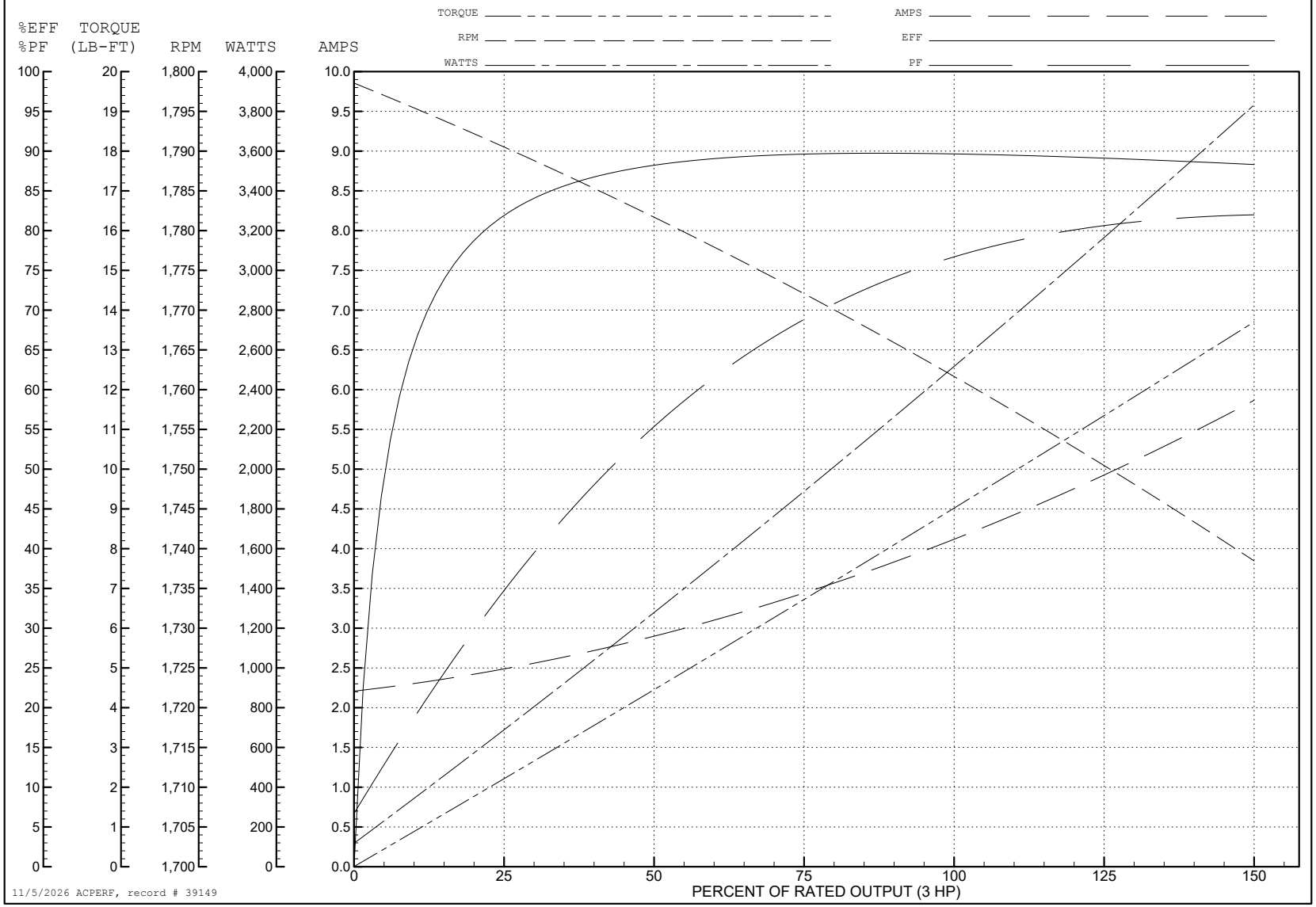

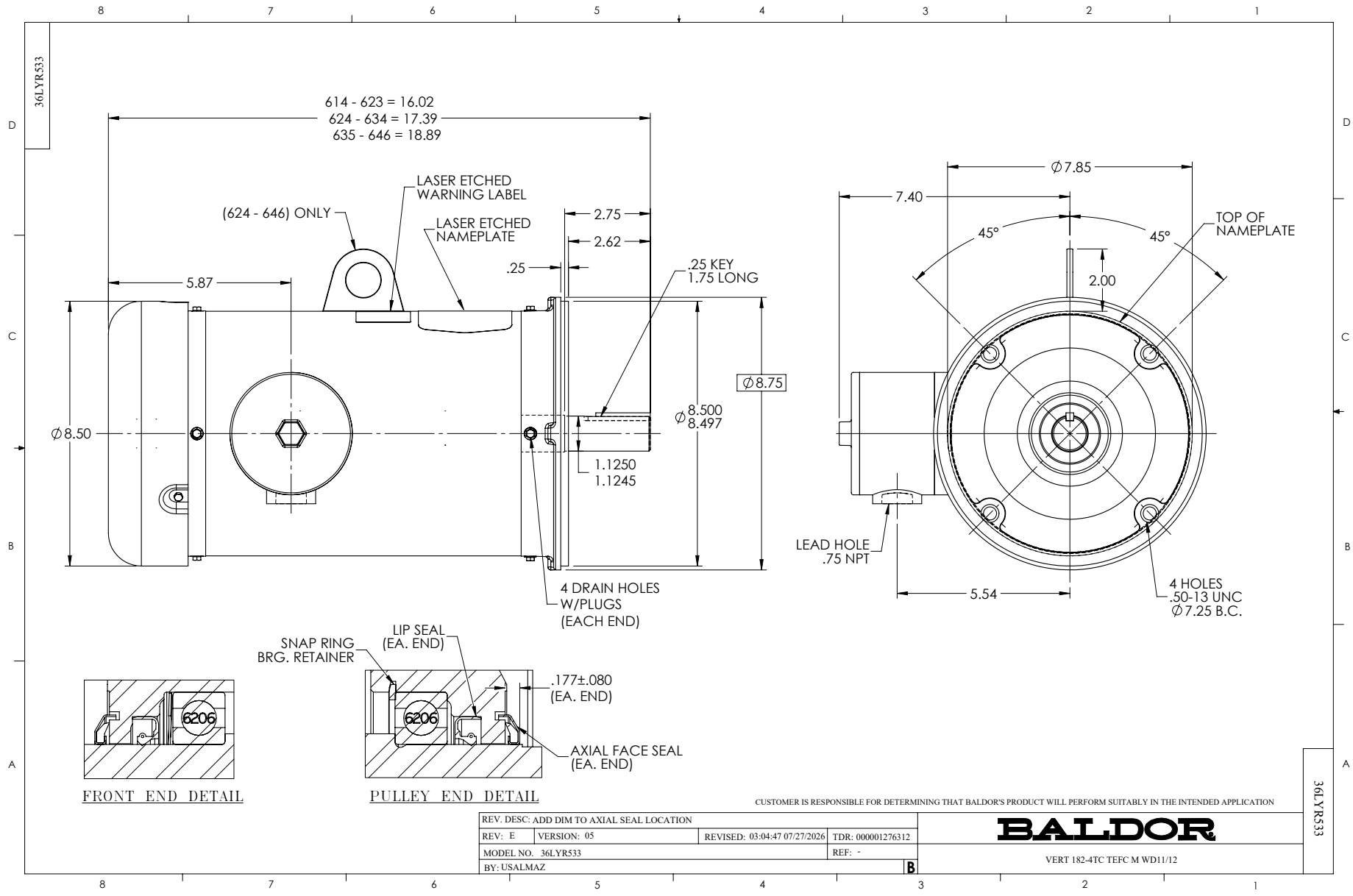
36LYR533
614 - 623 = 16.02
624 - 634 = 17.39
635 - 646 = 18.89
(624 - 646) ONLY
LASER ETCHED WARNING LABEL
LASER ETCHED NAMEPLATE
2.75
2.62
.25
.25 KEY 1.75 LONG
5.87
Ø8.50
Ø8.75
Ø8.500 8.497
1.1250 1.1245
4 DRAIN HOLES W/PLUGS (EACH END)
Ø7.85
7.40
45°
45°
TOP OF NAMEPLATE
2.00
LEAD HOLE .75 NPT
5.54
4 HOLES .50-13 UNC Ø7.25 B.C.
SNAP RING BRG. RETAINER
LIP SEAL (EA. END)
.177±.080 (EA. END)
AXIAL FACE SEAL (EA. END)
6206
6206
FRONT END DETAIL
PULLEY END DETAIL
CUSTOMER IS RESPONSIBLE FOR DETERMINING THAT BALDOR'S PRODUCT WILL PERFORM SUITABLY IN THE INTENDED APPLICATION
REV. DESC: ADD DIM TO AXIAL SEAL LOCATION
REV: E
VERSION: 05
REVISED: 03:04:47 07/27/2026
TDR: 000001276312
MODEL NO. 36LYR533
REF: -
BY: USALMAZ
B
BALDOR
VERT 182-4TC TEFC M WD11/12
36LYR533

CD0005

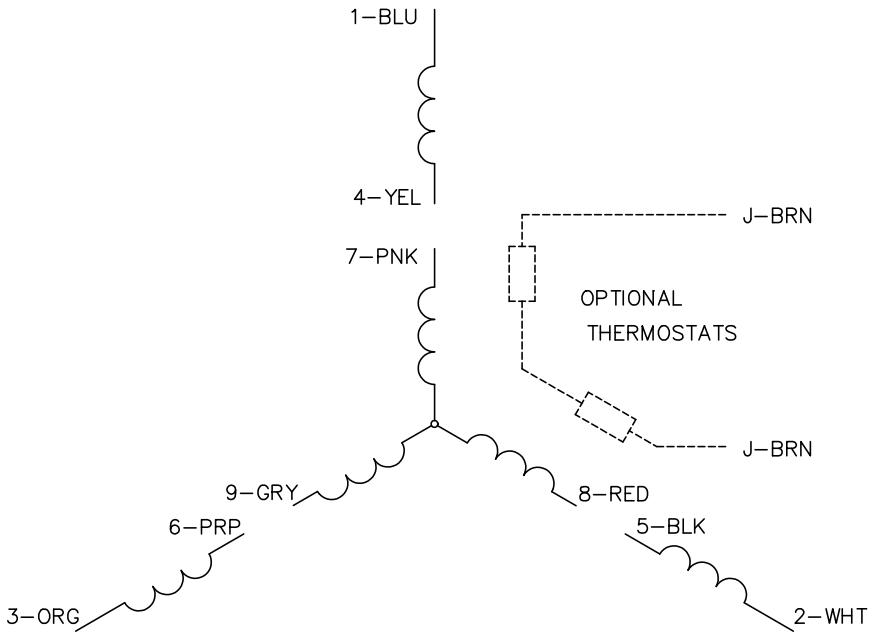

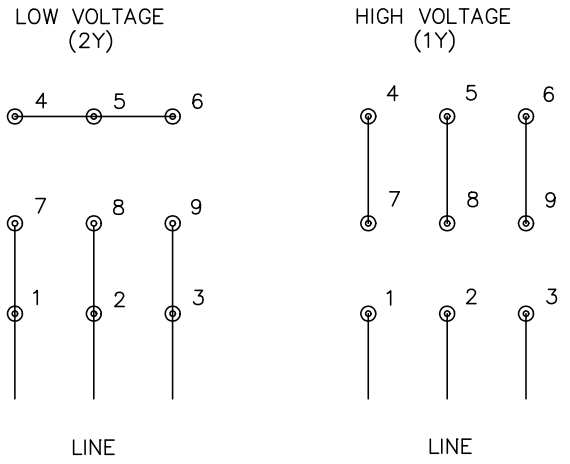

NOTES:

1. INTERCHANGE ANY TWO LINE LEADS TO REVERSE ROTATION.
2. OPTIONAL THERMOSTATS ARE PROVIDED WHEN SPECIFIED.
3. ACTUAL NUMBER OF INTERNAL PARALLEL CIRCUITS MAY BE A MULTIPLE OF THOSE SHOWN ABOVE.
4. LEAD COLORS ARE OPTIONAL. LEADS MUST ALWAYS BE NUMBERED AS SHOWN.

CD0005

REV. DESC: REVISE TO SHOW OPTIONAL COLORS			BALDOR ELECTRIC Co.
REV. LTR: E	BY: JLP	REVISED: 01/19/99 10:15	TDR: 0171435
CD0005		FILE: AAA00005140	MDL: –
		MTL: –	3PH, DV, 9 LEADS