ABB BALDOR RELIANCE

Customer information packet

VFSWDNM3554-E

1.5HP, 1765RPM, 3PH, 60HZ, 56C, 3540M, TENV, F1
Class - None
Division - Not Applicable

Copyright © All product information within this document is subject to ABB Motors and Mechanical Inc. copyright © protection, unless otherwise noted.
11/5/2026 9:00:16 AM

Specifications

Enclosure	TENV
Frame	56C
Frame Material	Stainless Steel
Frequency	60.00 Hz
Haz Area Class and Group	None
Haz Area Division	Not Applicable
Motor Letter Type	Three Phase
Output @ Frequency	1.500 HP @ 60 HZ
Phase	3
Synchronous Speed @ Frequency	1800 RPM @ 60 HZ
Voltage @ Frequency	230.0 V @ 60 HZ
	460.0 V @ 60 HZ
Agency Approvals	CSA EEV
	CURUSEEV
	NEMA PREMIUM
	NEMA_PREMIUM
	WEEE
Ambient Temperature	40 °C
Auxiliary Box	NO AUXILLARY BOX
Auxiliary Box Lead Termination	None
Base Indicator	No Mounting
Bearing Grease Type	Polyrex EM (-20F +300F)
Blower	None
Current @ Voltage	3.900 A @ 230.0 V
	1.950 A @ 460.0 V
Design Code	B
Drip Cover	No Drip Cover
Duty Rating	CONT
Efficiency @ 100% Load	86.5 %
Electrically Isolated Bearing	Not Electrically Isolated
Feedback Device	NO FEEDBACK
Front Shaft Indicator	None

Part Detail

Revision	C
Type	AC
Mech. spec.	35E4656
Base	
Status	PRD/A
Elec. spec.	35WGZ820
Layout	35LYE4656
Eff. date	08-14-2023
CD Diagram	CD0005
Poles	04
Leads	9#18
Proprietary	False
Created date	03-11-2022

Heater Indicator	No Heater
High Voltage Full Load Amps	2.0 a
Insulation Class	H
Inverter Code	Inverter Duty
KVA Code	M
Lifting Lugs	No Lifting Lugs
Locked Bearing Indicator	Locked Bearing
Max Speed	2700 rpm
Motor Finish	UNPAINTED
Motor Lead Quantity/Wire Size	9 @ 18 AWG
Motor Lead Termination	Flying Leads
Motor Standards	NEMA
Motor Type	3540M
Mounting Arrangement	F1
Number of Poles	4
Overall Length	15.04 IN
Power Factor	72
Product Family	WD All SS Encapsulated
Pulley End Bearing Type	Sealed Bearing
Pulley Face Code	C-Face
Pulley Shaft Indicator	Standard
Rodent Screen	None
Service Factor	1.15
Shaft Diameter	0.625 IN
Shaft Ground Indicator	No Shaft Grounding
Shaft Rotation	Reversible
Shaft Slinger Indicator	No Slinger
Speed	1765 rpm
Speed Code	Single Speed
Starting Method	Direct on line
Thermal Device - Bearing	None
Thermal Device - Winding	None
Vibration Sensor Indicator	No Vibration Sensor
Winding Thermal 1	None

Winding Thermal 2	None

Nameplate

NP4427AAA01												
CAT #	VFSWDNM3554-E			**WT**	59	**LBS**						
SPEC	35E4656Z820G1			**ENCL**	TENV							
SER #				**CC**	010A	**IP**	69					
HP	1.5			**MAG CUR**	2/1							
VOLTS	230/460					**NEMA NOM. EFF**	86.5					
AMPS	3.9/1.95					**PF**	72					
RATING	40C AMB-CONT											
RPM	1765				**MAX RPM**	2700						
FRAME	56C	**HZ**	60	**CODE**	M	**CLASS**	H					
SER.F.	1.15	**SF AMP**	4.4/2.2			**PH**	3	**DES**	B			
DE	6205			**ODE**	6205							
LUBRICATION	POLYREX EM											
ID LOGO		**INVERTER TYPE**		**VPWM**		**CHP**	60	**TO**	90		1.5:1	
ID LOGO	**WK2**	0.289	**CT**	15	**TO**	60		4:1				
ID LOGO	**SL HZ**	1.2	**VT**	3	**TO**	60		20:1				
						QR						
YR												

AC Induction Motor Performance Data
Record # 87357
Preliminary Data Sheet

Winding: 35WGZ820-R001	**Type:** 3540M	**Enclosure:** TENV

Nameplate Data				**460 V, 60 Hz: High Voltage Connection**	
Rated Output (HP)			1.5	**Full Load Torque**	4.49 LB-FT
Volts			230/460	**Start Configuration**	direct on line
Full Load Amps			3.9/1.95	**Breakdown Torque**	18.2 LB-FT
R.P.M.			1765	**Pull-up Torque**	10.49 LB-FT
Hz	60	**Phase**	3	**Locked-rotor Torque**	12.72 LB-FT
NEMA Design Code	B	**KVA Code**	M	**Starting Current**	18.17 A
Service Factor (S.F.)			1.15	**No-load Current**	1.03 A
NEMA Nom. Eff.	86.5	**Power Factor**	72	**Line-line Res. @ 25ºC**	10.9 Ω
Rating - Duty			40C AMB-CONT	**Temp. Rise @ Rated Load**	51°C
S.F. Amps			4.4/2.2	**Temp. Rise @ S.F. Load**	62°C
				Locked-rotor Power Factor	53.1
				Rotor inertia	0.289 lb-ft²

Load Characteristics 460 V, 60 Hz, 1.5 HP

% of Rated Load	**25**	**50**	**75**	**100**	**125**	**150**	**S.F.**
Power Factor	39	61	74	81	85	87	83
Efficiency	83	88.6	89.4	88.9	88	86.6	88.4
Speed	1789	1782	1774	1765	1756	1746	1760
Line amperes	1.11	1.31	1.6	1.96	2.35	2.8	2.19

ABB Motors and Mechanical Inc.

WINDING # 35WGZ820

1.5 HP 3 PH 60 HZ 1765 RPM 460 V 3540M

Typical performance - not guaranteed values.

TORQUES(LB-FT): PO=18.2 PU=10.49 LR=12.72 LRA=18.17

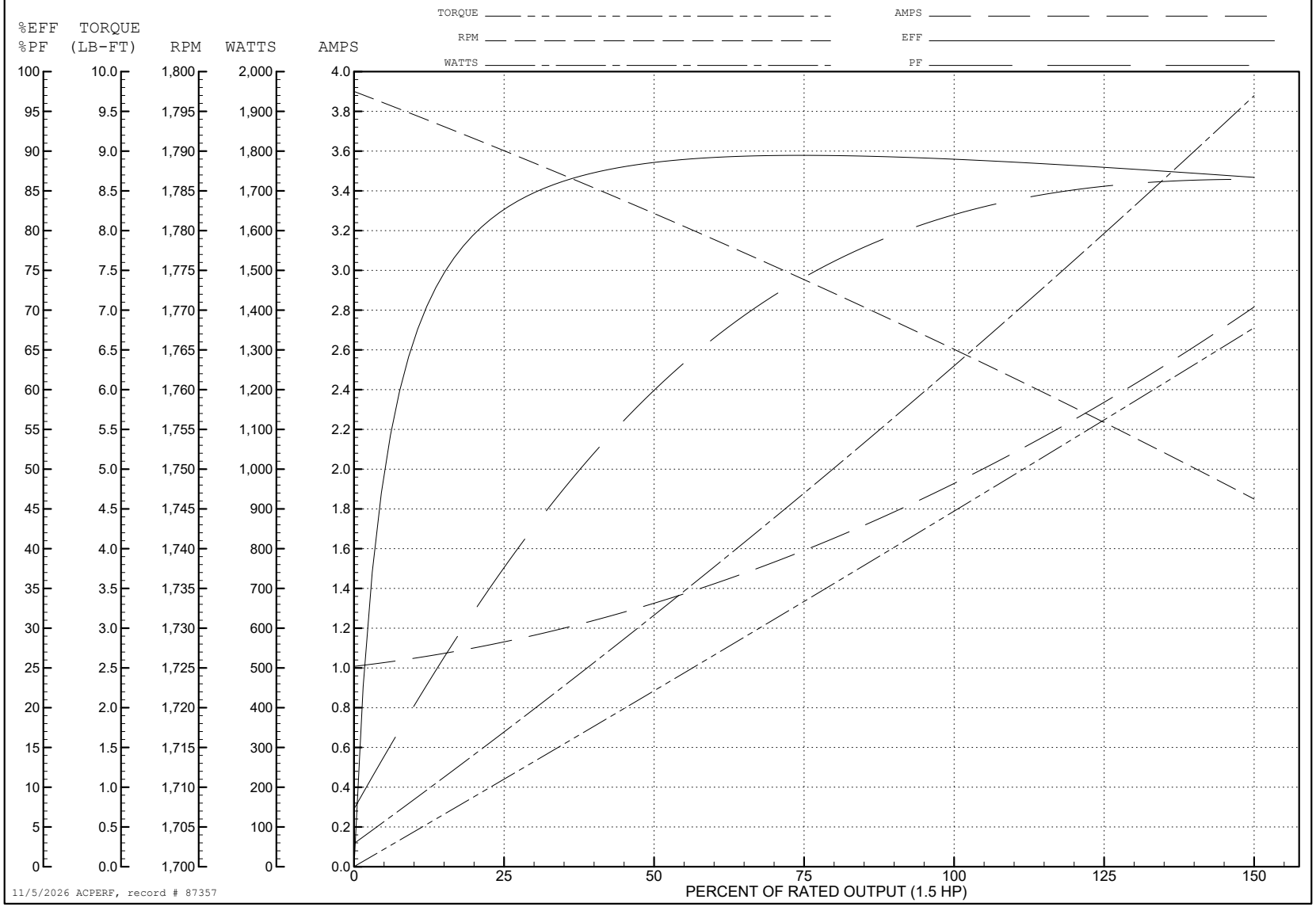

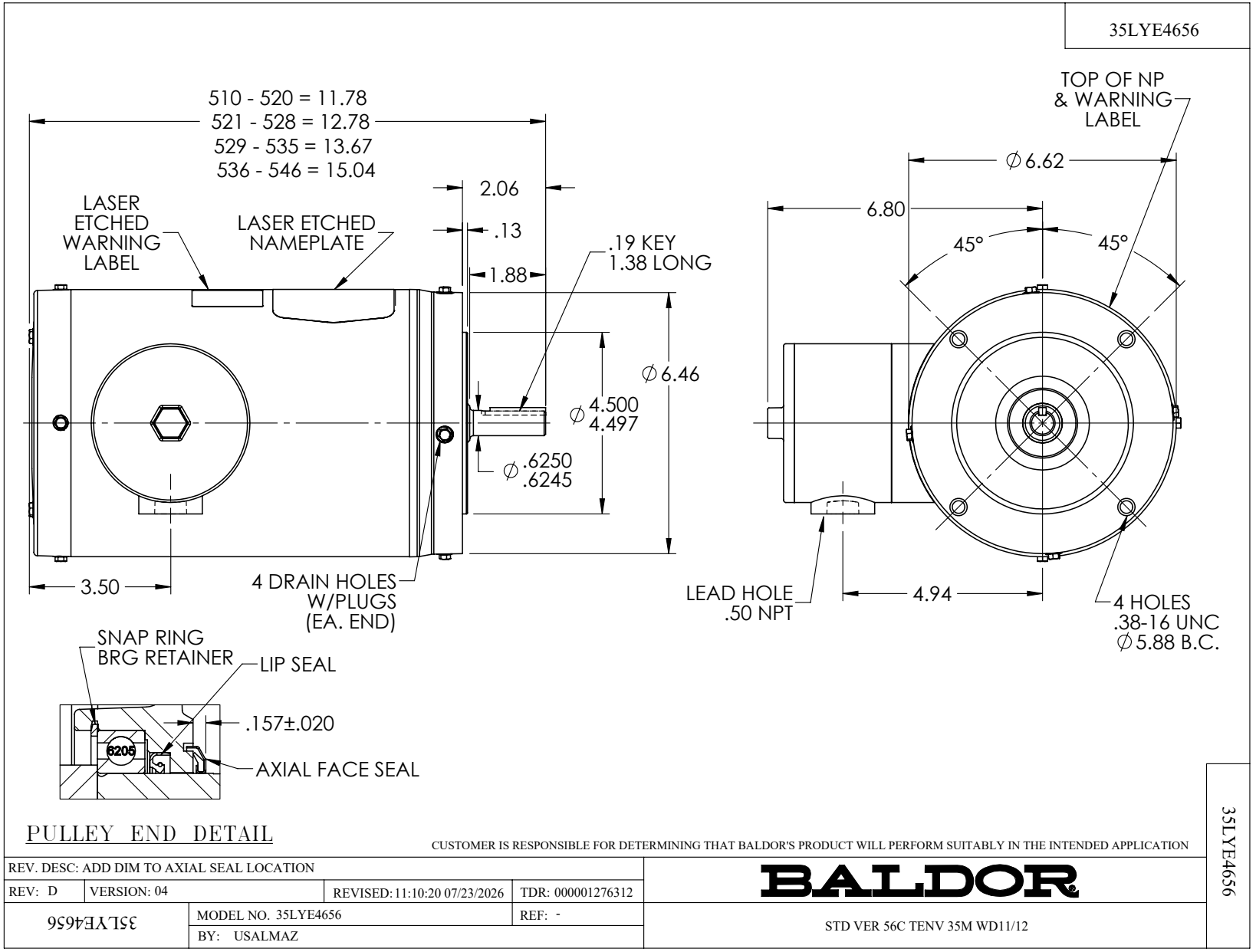
35LYE4656
510 - 520 = 11.78
521 - 528 = 12.78
529 - 535 = 13.67
536 - 546 = 15.04
2.06
.13
1.88
LASER ETCHED WARNING LABEL
LASER ETCHED NAMEPLATE
.19 KEY 1.38 LONG
∅6.46
∅4.500 4.497
∅.6250 .6245
3.50
4 DRAIN HOLES W/PLUGS (EA. END)
TOP OF NP & WARNING LABEL
∅6.62
6.80
45°
45°
LEAD HOLE .50 NPT
4.94
4 HOLES .38-16 UNC ∅5.88 B.C.
SNAP RING BRG RETAINER
LIP SEAL
.157±.020
6206
AXIAL FACE SEAL
PULLEY END DETAIL
CUSTOMER IS RESPONSIBLE FOR DETERMINING THAT BALDOR'S PRODUCT WILL PERFORM SUITABLY IN THE INTENDED APPLICATION
REV. DESC: ADD DIM TO AXIAL SEAL LOCATION
REV: D
VERSION: 04
REVISED: 11:10:20 07/23/2026
TDR: 000001276312
BALDOR
35LYE4656
MODEL NO. 35LYE4656
REF: -
BY: USALMAZ
STD VER 56C TENV 35M WD11/12
35LYE4656

CD0005

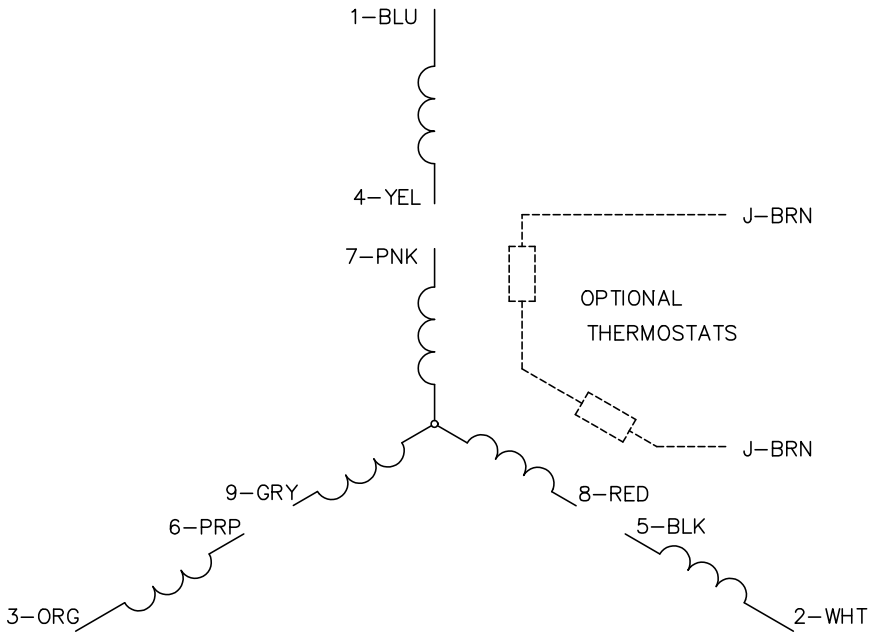

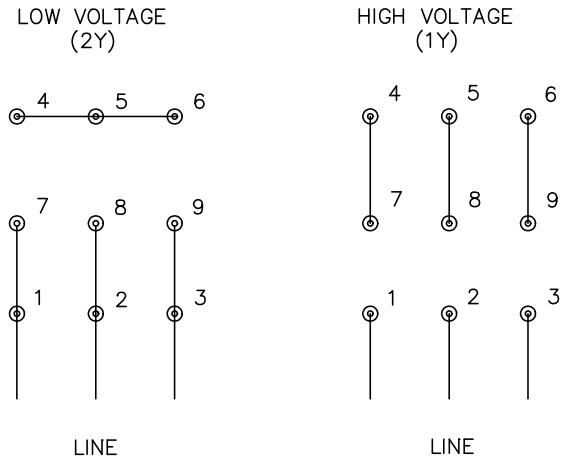

NOTES:

1. INTERCHANGE ANY TWO LINE LEADS TO REVERSE ROTATION.
2. OPTIONAL THERMOSTATS ARE PROVIDED WHEN SPECIFIED.
3. ACTUAL NUMBER OF INTERNAL PARALLEL CIRCUITS MAY BE A MULTIPLE OF THOSE SHOWN ABOVE.
4. LEAD COLORS ARE OPTIONAL. LEADS MUST ALWAYS BE NUMBERED AS SHOWN.

CD0005

REV. DESC: REVISE TO SHOW OPTIONAL COLORS			BALDOR ELECTRIC Co.
REV. LTR: E	BY: JLP	REVISED: 01/19/99 10:15	TDR: 0171435
CD0005		FILE: AAA00005140	MDL: –
		MTL: –	3PH, DV, 9 LEADS