ABB BALDOR RELIANCE

Customer information packet

CDP3320

.33HP, 1750RPM, DC, 56C, 3327P, TENV, F1, N

Copyright © All product information within this document is subject to ABB Motors and Mechanical Inc. copyright © protection, unless otherwise noted.
11/5/2026 3:30:10 PM

Specifications

Armature Voltage	90 V
Base Speed	1750 rpm
Enclosure	TENV
Frame	56C
Frame Material	Steel
Output Power	0.330 HP
Agency Approvals	CE
	CSA
	UR
Ambient Temperature	40 °C
Armature Current	3.2 a
Armature Inertia	10.535 lb-ft2
Base Indicator	Rigid
Bearing Grease Type	Polyrex EM (-20F +300F)
Drip Cover	No Drip Cover
Duty Rating	CONT
Feedback Device	NO FEEDBACK
Heater Indicator	No Heater
Lifting Lugs	No Lifting Lugs
Motor Lead Exit	Ko Box
Motor Lead Quantity/Wire Size	2 @ 18 AWG, A
Motor Lead Termination	Flying Leads
Motor Standards	NEMA
Mounting Arrangement	F1
Overall Length	13.19 IN
Product Family	General Purpose
Pulley End Bearing Type	Sealed Bearing
Service Factor	1.00
Shaft Diameter	0.625 IN
Shaft Extension Location	Pulley End
Shaft Ground Indicator	No Shaft Grounding
Shaft Rotation	Reversible

Part Detail

Revision	AE
Type	DC
Mech. spec.	33-2024
Base	
Status	PRD/A
Elec. spec.	33WGZ102
Layout	33LY2024
Eff. date	10-24-2024
CD Diagram	CD0194
Poles	00
Leads	2#18 A Y
Proprietary	False
Created date	01-01-0001

Shaft Slinger Indicator	No Slinger

Nameplate

NP0891L							
CAT.NO.	CDP3320						
SPEC.	33-2024Z102						
HP	.33/KW.25		**ENCL**	TENV			
RPM	1750 1/MIN IP44 IC410 KG12						
FRAME	56C		**TYPE**	3327P			
ARM V	90		**ARM A**	3.2			
FLD V			**FLD A**				
INSUL	F		**AMB.**	40			
DUTY	CONT			**SUPPLY**	1.3		
BRG/DE	6203			**BRG/ODE**	6203		
BRUSHES	2/BP5011T01						
			BLANK				
SER.							
BLANK							
APRV-CE	Y	**APRV-CSA**	Y	**APRV-UL**	Y		

Accessories

Part number	Description	Multiplier
TK3300	TACHO MOUNTING KIT TK3300	A8
TK3300-HPU	HPU10 MOUNTING KIT 33P/34P TENV	A8

DC Motor Performance Data
Record # 208
Typical performance - not guaranteed values

Winding: 33WGZ102-R001	**Type:** 3327P	**Enclosure:** TENV

Nameplate Data	
Rated Output (HP)	0.33
R.P.M.	1750
Armature Volts	90
Armature Amps	3.2
Field Volts	
Field Amps	
Rating - Duty	40C AMB-CONT
Form Factor	1.3

General Characteristics

Load Characteristics at 90 Armature Volts

Load Point	**1**	**2**	**3**	**4**	**5**	**6**	**7**
Armature Amps	0.25	0.85	1.55	2.25	2.9	3.3	4.2
R.P.M.	1831	1796	1745	1703	1665	1627	1592
Torque (LB-FT)	0	0.23	0.49	0.74	0.99	1.23	1.47

ABB Motors and Mechanical Inc.

WINDING # 33WGZ102

0.33 HP DC 1750 RPM 90 V 3327P

ENCL: TENV DUTY: CONT CL: F

Typical performance - not guaranteed values.

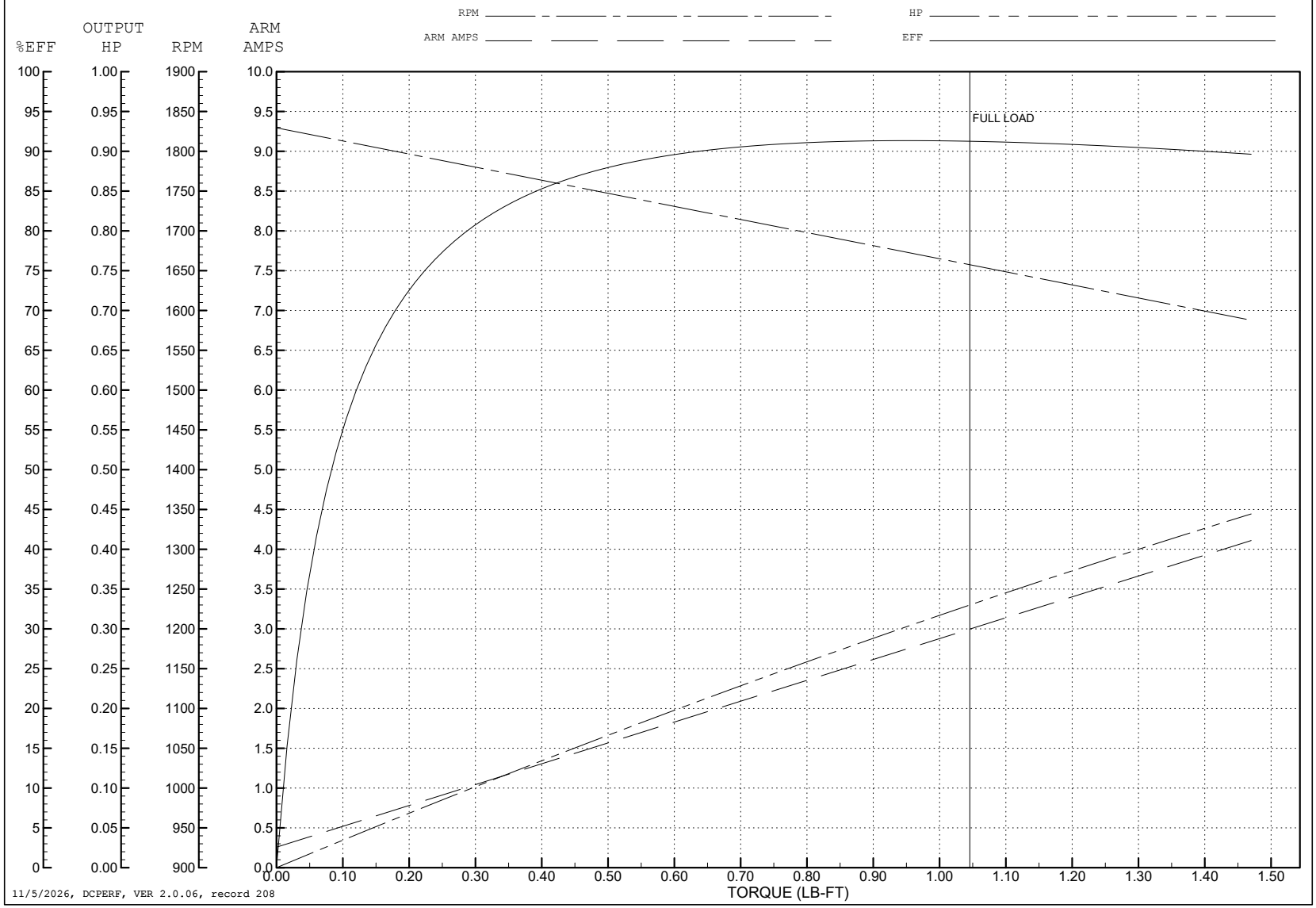

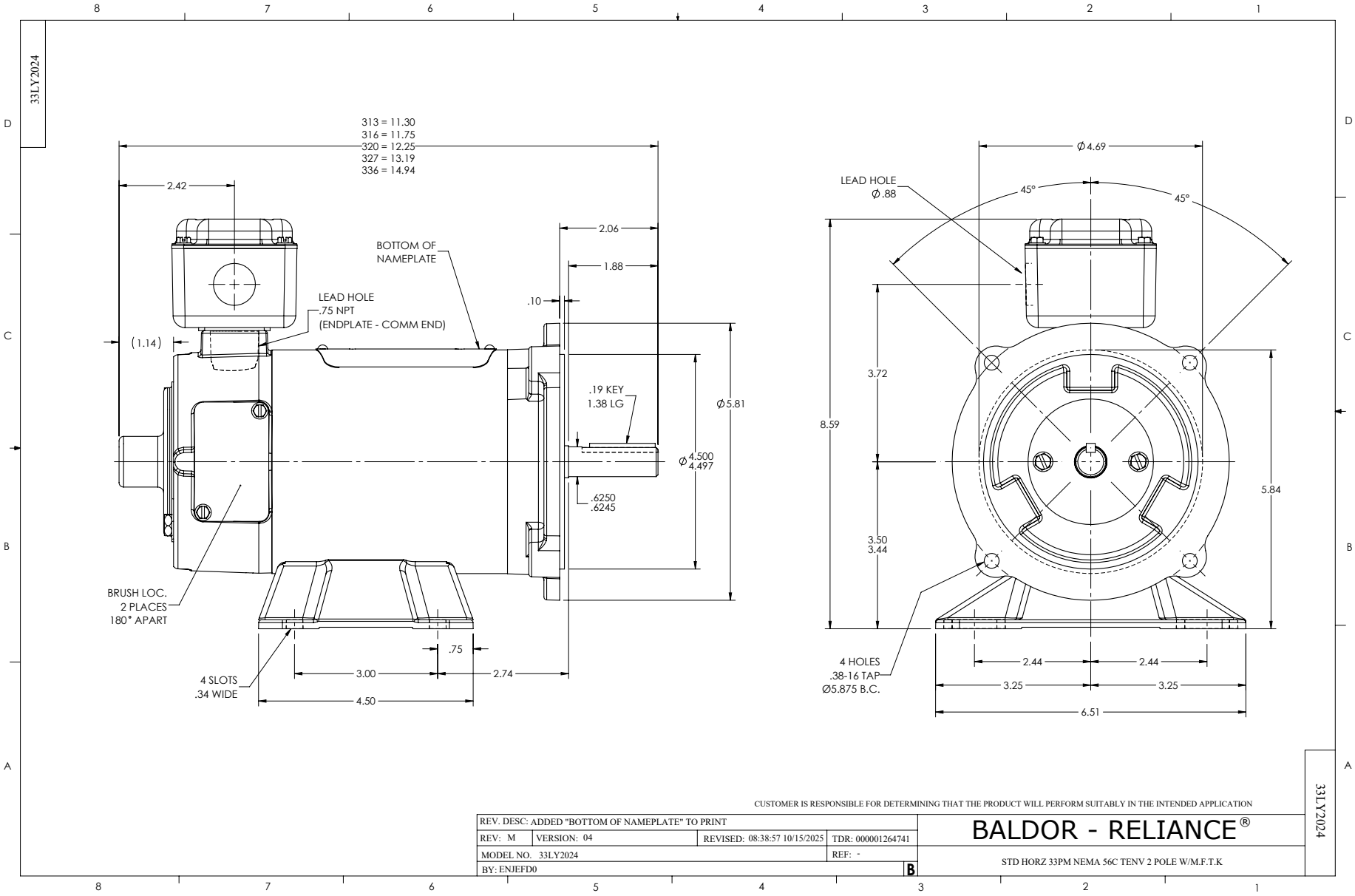
33LY2024
313 = 11.30
316 = 11.75
320 = 12.25
327 = 13.19
336 = 14.94
2.42
2.06
1.88
.10
BOTTOM OF NAMEPLATE
LEAD HOLE .75 NPT (ENDPLATE - COMM END)
(1.14)
.19 KEY 1.38 LG
Ø5.81
Ø4.500 4.497
.6250 .6245
BRUSH LOC. 2 PLACES 180° APART
.75
3.00
2.74
4.50
4 SLOTS .34 WIDE
Ø4.69
LEAD HOLE Ø.88
45°
45°
3.72
8.59
5.84
3.50 3.44
4 HOLES .38-16 TAP Ø5.875 B.C.
2.44
2.44
3.25
3.25
6.51
CUSTOMER IS RESPONSIBLE FOR DETERMINING THAT THE PRODUCT WILL PERFORM SUITABLY IN THE INTENDED APPLICATION
REV. DESC: ADDED "BOTTOM OF NAMEPLATE" TO PRINT
REV: M
VERSION: 04
REVISED: 08:38:57 10/15/2025
TDR: 000001264741
MODEL NO. 33LY2024
REF: -
BY: ENJEFD0
B
BALDOR - RELIANCE®
STD HORZ 33PM NEMA 56C TENV 2 POLE W/M.F.T.K
33LY2024

CD0194

MOTOR

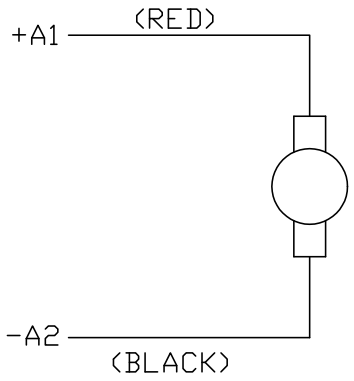

THERMOSTAT
(WHEN REQUIRED)

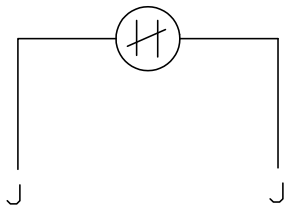

TACHOMETER

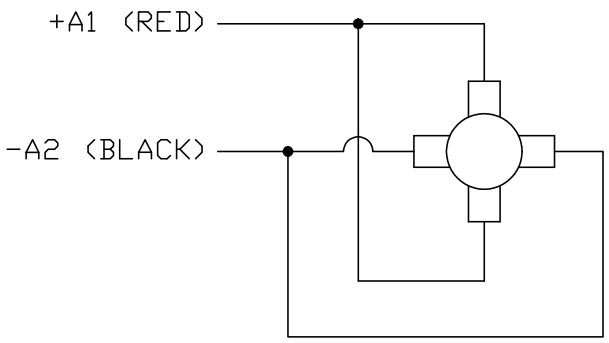

NOTES:

1. CCW ROTATION AS SHOWN FACING COMMUTATOR END. TO REVERSE MOTOR ROTATION OR TACHOMETER OUTPUT POLARITY INTERCHANGE LEADS A1(RED) & A2(BLACK)

2. LEAD COLORS FOR REFERENCE ONLY & NOT SPECIFIED BY THIS DRAWING. LEAD COLORS SPECIFIED BY LAYOUT DRAWING & BILL OF MATERIAL ONLY.

CD0194

MATL: –				BALDOR ELECTRIC Co.
REV: E	ADDED NOTE "LEAD COLORS FOR REFERENCE ONLY &....			
CD0194	SCALE: –	BY: CK	REVISED: 07/28/95	CD TYPE P DC PERMANENT MAGNET MOTORS AND TACHOMETERS
	FILE: AAA00004503		TDR: 0078737	