TITAN
Solar Bollard-005

Solar-powered bollard lights are innovative outdoor lighting fixtures that harness solar energy to illuminate pathways, driveways, and outdoor spaces. These compact and stylish fixtures are equipped with built-in solar panels, which absorb sunlight during the day and convert it into electricity to power LED bulbs at night. Offering a sustainable and energy-efficient lighting solution, solar-powered bollard lights enhance safety and visibility while minimizing environmental impact. With easy installation and low maintenance requirements, these lights are an eco-friendly and cost-effective way to enhance both aesthetics and functionality in outdoor environments



NOMINAL FLUX ..... **250 LUMENS**
NOMINAL POWER ..... **1.8 WATT**

LIGHTING

Efficiency ..... **120 Lumens/Watt**
Chips LED ..... **PHILIPS Luxeon 30-30**
LED Lifetime ..... **Over 80000 hours LM80**
Optics/CCT ..... **T-V / 3000K/5000K or 4000K/5000K | Adjustable: Yes (Custom CCT available)**
Installation Height ..... **43.3 or 31.4 Inches**

BATTERY

Technology ..... **Lithium Iron Phosphate LIFEPO4**
Capacity **28Wh**
Autonomy ..... **Over 24 hours at full charge - 4 Rainy Days back up**
Charging Time ..... **6 hours**
Lifespan ..... **Over 3000 CYCLES @ 80% DOD over 10 years Lifetime**
Working Temp ..... **14°F to 158°F** - (Optional -40°F TO 158°F)

ENERGY

Solar Panel ..... **4.5 Wc**
Cells Type ..... **Monocrystaline Panel Grade A 25 years**
Certificates ..... **IEC 61215 - IEC 61730 I and II - IEC 60904**

ELECTRONIC

Sensor ..... **PIR 180° Sensor (Optional)**

DIMENSIONS

Product ..... **D 9.84 x H 43.30 or D 9.84 x H 31.49 Inches**
Carton Size ..... **45.27 x 12.59 x 13 or 33.46 x 12.59 x 13 Inches**
Weight ..... **15 Lbs or 12.34 Lbs**
Materials ..... **Die Cast Aluminum**
Installation ..... **Insert on support**

Model Number ..... **AVS-BL005 / AVS-BL005-45**
SKU ..... **787904 / 787904-2**

Beyond Solar retains the right to modify or change product specifications without prior notice, as part of our ongoing commitment to improvement

Model #	SKU #	Installation Height	Power	Solar Panel	Lithium Battery	Lumens	CCT Adjustable	IP Rating	Material
AVS-BL005	787904	43.3 In	1.8W	4.5Wc	4.5AH / 6.4V	250LM	3000K/5000K	IP65	ALUMINUM
AVS-BL005-45	787904-2	31.4 In	1.8W	4.5Wc	4.5AH / 6.4V	250LM	4000K/5000K	IP65	ALUMINUM

(Custom CCT available)

5 Year Limited Warranty

TITAN
Solar Bollard-005

LUMINAIRE & **LEDs**

IP65

The TITAN Bollard 43.30" - 31.49" incorporates the latest LED technologies, its elegance and ease of installation will meet your lighting needs. TITAN is equipped with LED chips, combining performance and robustness with 120 lumens per watt.



A TOTAL OF 250 LUMENS

Our light fixture also complies with current standards concerning light pollution.

SYMMETRICAL DISTRIBUTION

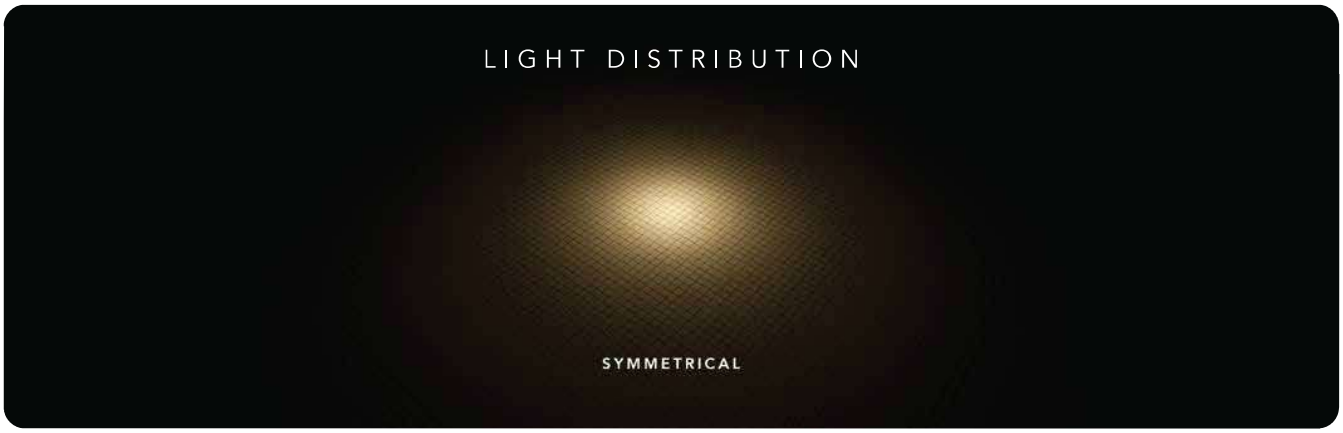

PHOTOMETRIC CURVE

LIGHT DISTRIBUTION CURVE
UNIT : CD

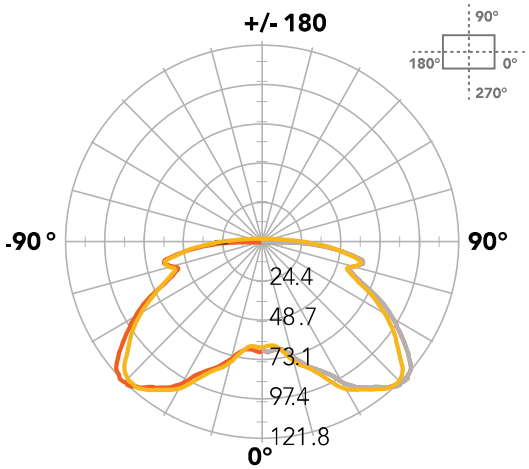

LIGHT DISTRIBUTION CURVE
LINEAR

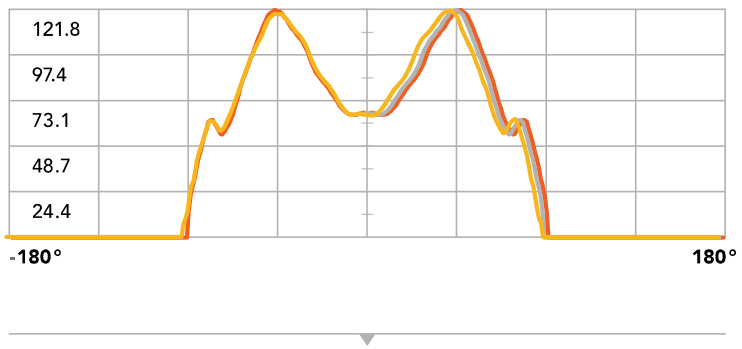

CD **C0/C180** **C90/C270** **C0**

5 Year Limited Warranty

TITAN
Solar Bollard-005

CORRELATED COLOR **TEMPERATURE**

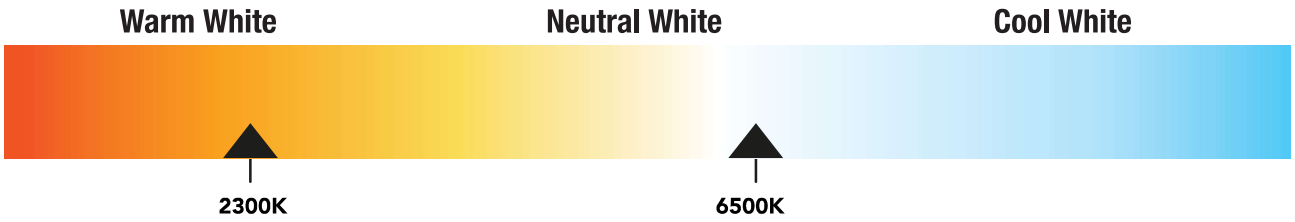

BATTERY **LIFEPO4**

The TITAN 43.30" / 31.49" bollard is equipped with Lithium Iron Phosphate LIFEPO4 batteries, recognized as the best battery technology in terms of longevity, safety, and performance for solar applications. Our batteries enjoy a lifespan of over 3000 cycles, which is more than 10 years at 80% DOD.



EXTREME TEMPERATURE
14F TO 158F

While standard batteries benefit from an operating temperature of 14F to 158F, Beyond Solar offers as optional a new Special LIFEPO4 battery with working range of -40F to 158F

BMS ELECTRONIC PROTECTION BATTERY MANAGEMENT SYSTEM

Our batteries are equipped with electronic circuit boards for a higher protection, ensuring battery functioning optimization in any situation.

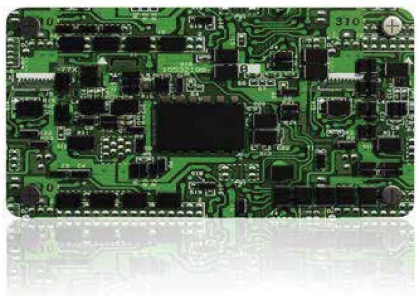

THE BMS PROTECTS AGAINST

OVER/UNDER CURRENT • OVERLOAD • OVER/UNDER VOLTAGE • OVER/UNDER CHARGE • TEMPERATURE MANAGEMENT

5 Year Limited Warranty

TITAN
Solar Bollard-005

SOLAR **PANEL**

4.5 WATT

Encapsulated Monocrystalline Solar Panel **Grade A** Solar Cell with Tempered Glass.

Solar cells **GRADE A**

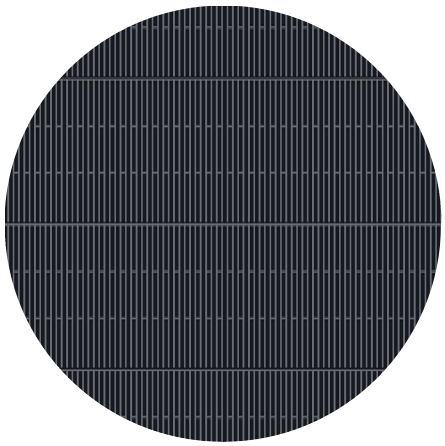

OUR PV PERFORMANCE GUARANTEE

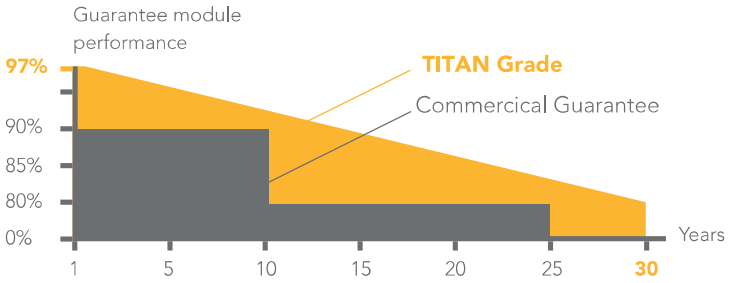

PRESENCE DETECTOR
INFRA-RED SENSOR

THE TITAN 43.30" / 31.49" BOLLARD AUTOMATICALLY TURNS ON AT DUSK AND OFF AT DAWN.

TITAN offers optional PIR movement sensor. The infra red detector integrated into the light fixture will increase the light power as pedestrians or vehicles pass, thus providing a higher level of safety while respecting the environment.

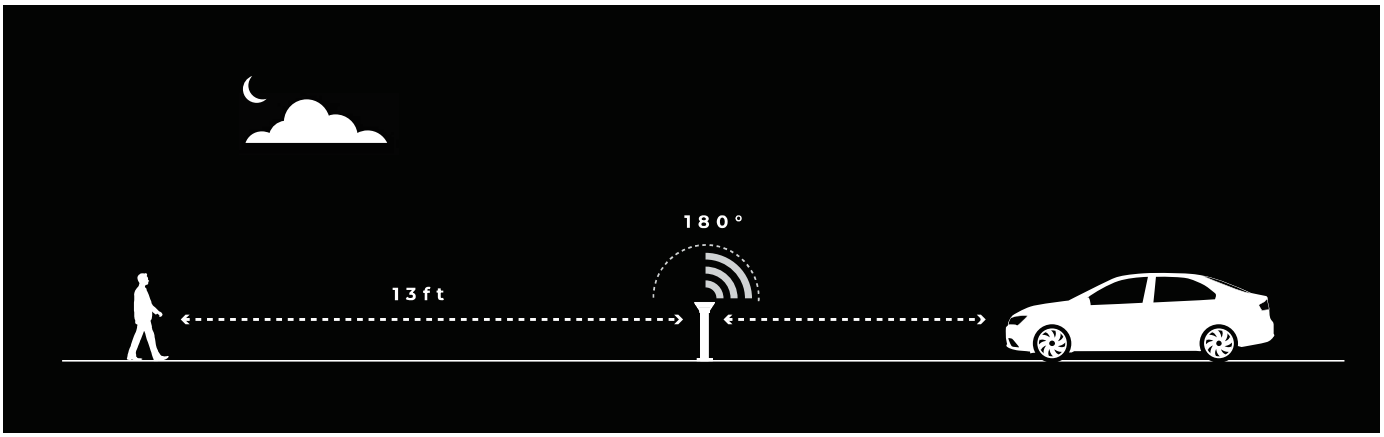

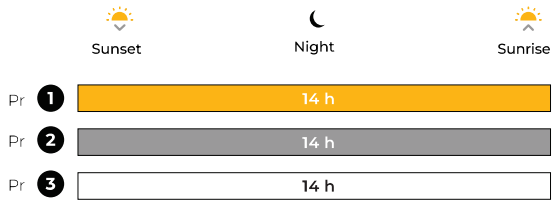

Depending on the geographical area, we will select the % of light reduction.

- **Program 1 >** 40% Dim + 100% ON during 20 sec
- **Program 2 >** 30% Dim + 100% ON during 20 sec
- **Program 3 >** 20% Dim + 100% ON during 20 sec

5 Year Limited Warranty

TITAN
Solar Bollard-005

EASY INSTALLATION
NO CABLING • NO TRENCHING

No wiring or trenching is necessary, you
just need to embed the TITAN onto anchor rods.

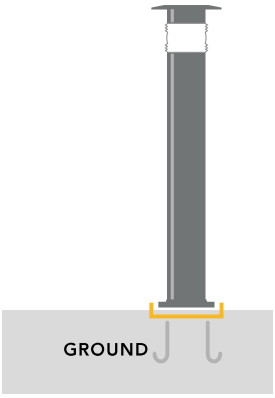

FLAT MOUNT

DIMENSIONS
BOLLARD AND BASE

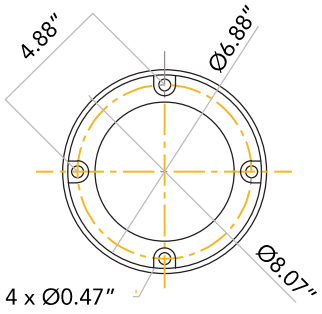

FLANGE

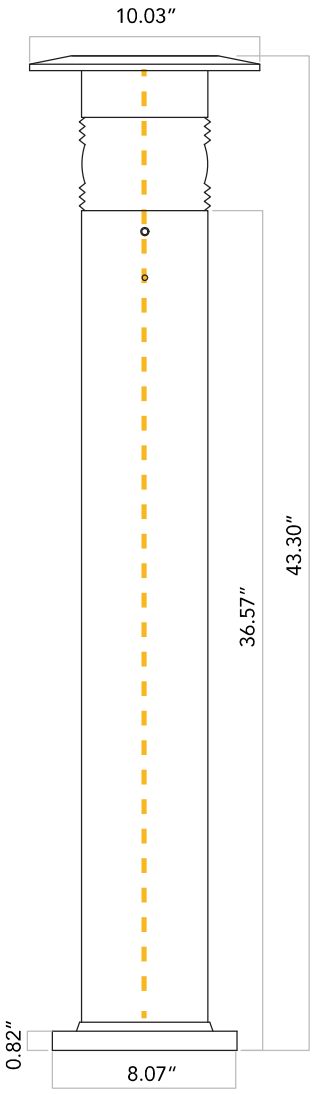

Installation Height
43.3 Inches

All Dimensions Are In Inches

5 Year Limited Warranty

TITAN
Solar Bollard-005

EASY INSTALLATION
NO CABLING • NO TRENCHING

No wiring or trenching is necessary, you
just need to embed the TITAN onto anchor rods.

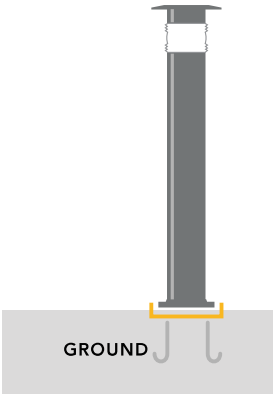

FLAT MOUNT

DIMENSIONS
BOLLARD AND BASE

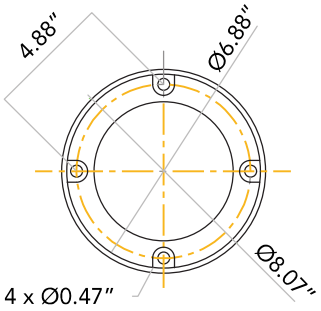

FLANGE

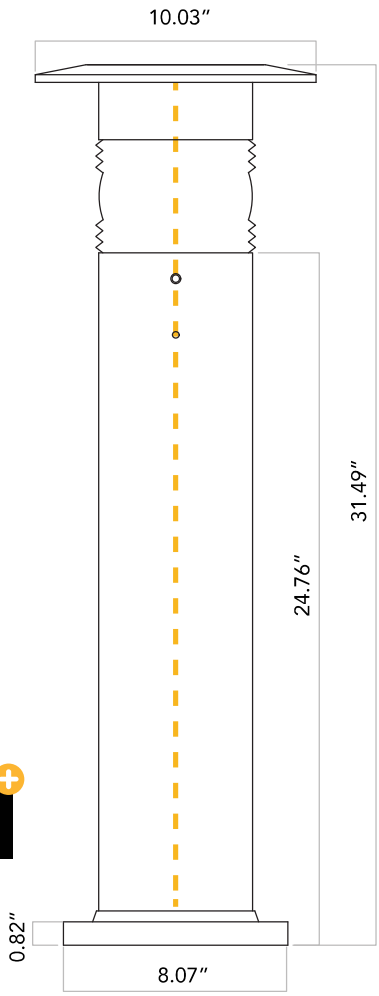

Installation Height
31.4 Inches

All Dimensions Are In Inches

5 Year Limited Warranty

TITAN
Solar Bollard-005

DIMENSIONS

All Dimensions Are In Inches



M8 Lead Screw
*300
4 Pieces





4 Sleeves

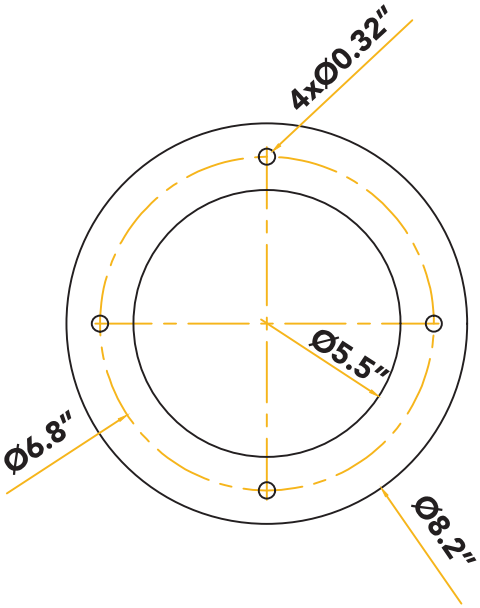

0.066 Inches
Galvanized Sheet
2 Pieces

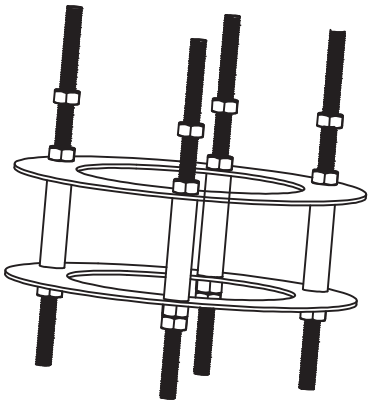

M8 nuts X20
8*24 gaskets X8

J-bolt SKU: 787904-J-bolt

J-Bolt set is sold separately and is not included with the bollard fixture.

TITAN

Solar Bollard-005

