marathon®

Washdown Motors

Model No: 182TCWW7026
Catalog No: 131571.00M

Washdown Motor, 2 HP, 1 Ph, 60 Hz, 115/208-230 V, 1800 RPM, 182T Frame, TEFC

©2026 Marathon, All Rights Reserved.

marathon®

Product Information Packet: Model No: 182TCWW7026, Catalog No: 131571.00M Washdown Motor, 2 HP, 1 Ph, 60 Hz, 115/208-230 V, 1800 RPM, 182T Frame, TEFC

Nameplate Specifications

Phase	**1**	Output HP	**2 Hp**
Output KW	**1.5 kW**	Voltage	**115/208-230 V**
Speed	**1740 r/min**	Synchronous RPM	**1800 r/min**
Service Factor	**1.15**	Frame	**182T**
Enclosure	**Totally Enclosed Fan Cooled**	Thermal Protection	**No Protection**
Efficiency	**71 %**	Ambient Temperature	**40 °C**
Frequency	**60 Hz**	Current	**25.2/14.0-12.6 A**
Power Factor	**72**	Duty	**Continuous**
Insulation Class	**F**	Design Code	**NO DESIGN CODE**
KVA Code	**K**	Drive End Bearing Size	**6207**
Opp Drive End Bearing Size	**6205**	UL	**Recognized**
CSA	**Y**	CE	**Y**
IP Code	**55**	Number of Speeds	**1**

Technical Specifications

Electrical Type	**Capacitor Start Induction Run**	Starting Method	**Across The Line**
Poles	**4**	Rotation	**Selective Counterclockwise**
Resistance Main	**.86 O**	Mounting	**Rigid Base**
Motor Orientation	**Horizontal**	Drive End Bearing	**Ball**
Opp Drive End Bearing	**Ball**	Frame Material	**Rolled Steel**
Shaft Type	**T**	Overall Length	**13.46 in**
Shaft Diameter	**1 1/8 in**	Shaft Extension	**2.75 in**
Assembly/Box Mounting	**F1 Only**		

Drawings

Connection Drawing	**005278.07ME**	Outline Drawing	**035460ME-800**

This is an uncontrolled document once printed or downloaded and is subject to change without notice. Date Created: 14/10/2026

Uncontrolled Copy

035460ME

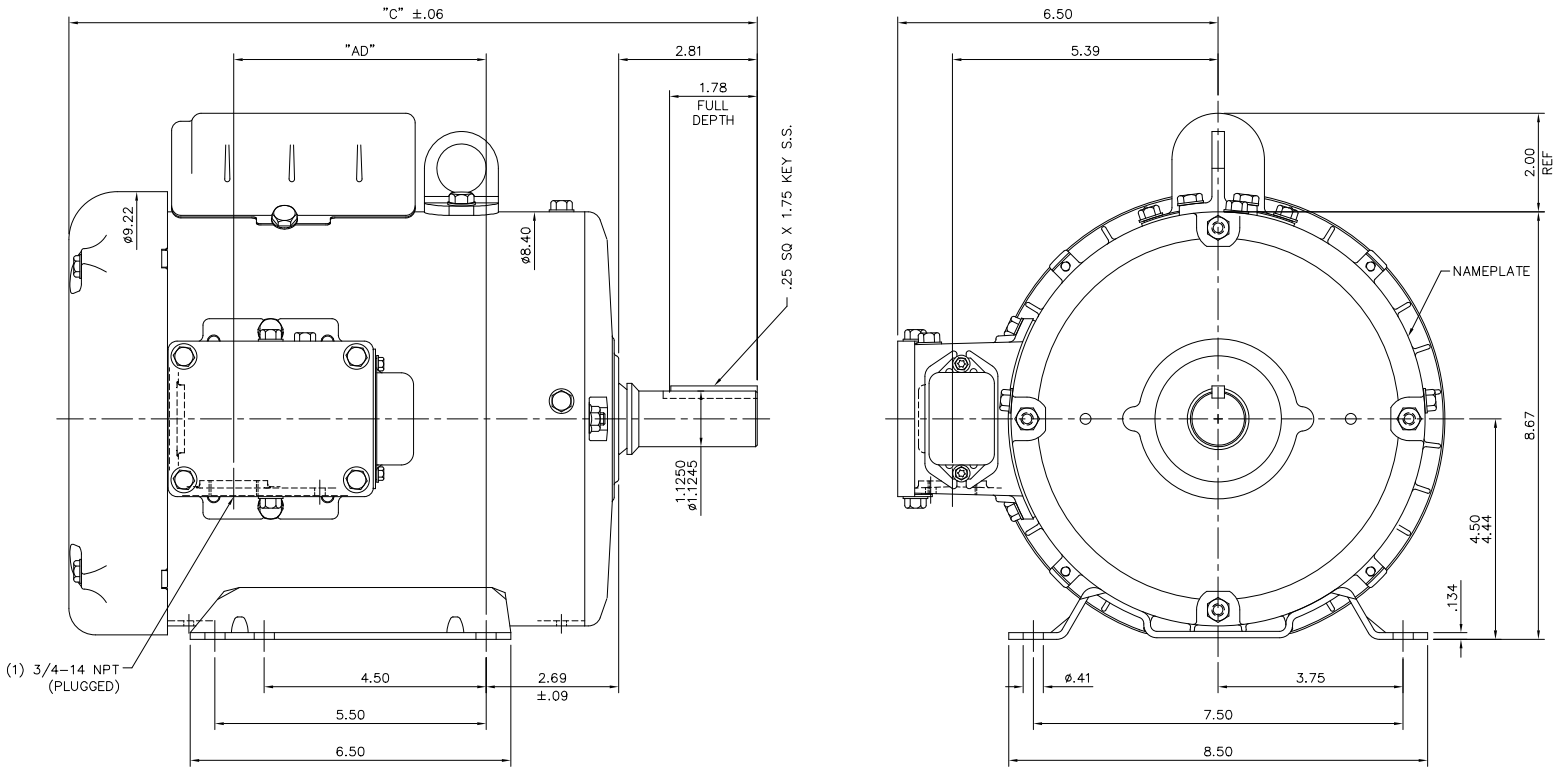

SPECIAL FEATURES:

1) SHAFT SEALS & V-RING
2) DRAIN HOLES IN FRAME & CONDUIT BOX
3) GASKETS THROUGHOUT
4) STAINLESS STEEL SHAFT, HARDWARE & NAMEPLATE

DASH NO.	"C"	"AD"
800	13.46	4.62
850	13.96	5.12
900	14.46	5.62
950	14.96	6.12
1000	15.46	6.62
1050	15.96	7.12
1100	16.46	7.62
1150	16.96	8.12

NO.	REVISION	BY & DATE	CHK
01	C'BOX BOLT ADDED, NMR-0235353	DKB 12-27-24	DKB

TOLERANCES UNLESS SPECIFIED

DEC.	INCHES
.X	±.1
.XX	±.03
.XXX	±.005
.XXXX	±.0005
ANG	±1/2°

MARATHON ELECTRIC

DRAWN BJB 09/04/03
CHK
APPD
SCALE 1=2
REF OL131571
FMF
PREV

TITLE: OUTLINE – 180T FRAME TEFC – RIGID
MAT'L.: WASHGUARD
FINISH
CAD FILE: 035460ME

RFP
DIST NLV

SIZE B | DRAWING NO. 035460ME | REV. C

THIS DRAWING IN DESIGN AND DETAIL IS OUR PROPERTY AND MUST NOT BE USED EXCEPT IN CONNECTION WITH OUR WORK ALL RIGHTS OF DESIGN AND INVENTION ARE RESERVED THIS IS AN ELECTRONICALLY GENERATED DOCUMENT – DO NOT SCALE THIS PRINT