ABB BALDOR RELIANCE

Customer information packet

CFSWDM3539-E

.5HP, 1175RPM, 3PH, 60HZ, 56C, 3522M, TENV, F1
Class - None
Division - Not Applicable

Copyright © All product information within this document is subject to ABB Motors and Mechanical Inc. copyright © protection, unless otherwise noted.
11/5/2026 1:49:29 PM

Specifications

Enclosure	TENV
Frame	56C
Frame Material	Stainless Steel
Frequency	60.00 Hz
Haz Area Class and Group	None
Haz Area Division	Not Applicable
Motor Letter Type	Three Phase
Output @ Frequency	.500 HP @ 60 HZ
Phase	3
Synchronous Speed @ Frequency	1200 RPM @ 60 HZ
Voltage @ Frequency	208.0 V @ 60 HZ
	230.0 V @ 60 HZ
	460.0 V @ 60 HZ
Agency Approvals	CSA
	CURUSEEV
	NEMA PREMIUM
	NEMA_PREMIUM
	WEEE
Ambient Temperature	40 °C
Auxiliary Box	NO AUXILLARY BOX
Auxiliary Box Lead Termination	None
Base Indicator	Rigid
Bearing Grease Type	Polyrex EM (-20F +300F)
Blower	None
Current @ Voltage	2.000 A @ 230.0 V
	2.000 A @ 208.0 V
	1.000 A @ 460.0 V
Design Code	B
Drip Cover	No Drip Cover
Duty Rating	CONT
Efficiency @ 100% Load	77.0 %
Electrically Isolated Bearing	Not Electrically Isolated

Part Detail

Revision	D
Type	AC
Mech. spec.	35E4735
Base	
Status	PRD/A
Elec. spec.	35WGG337
Layout	35LYE4735
Eff. date	12-06-2024
CD Diagram	CD0005
Poles	06
Leads	9#18
Proprietary	False
Created date	09-09-2022

Feedback Device	NO FEEDBACK
Front Shaft Indicator	None
Heater Indicator	No Heater
High Voltage Full Load Amps	1.0 a
Insulation Class	H
Inverter Code	Inverter Ready
KVA Code	M
Lifting Lugs	No Lifting Lugs
Locked Bearing Indicator	Locked Bearing
Max Speed	1800 rpm
Motor Finish	UNPAINTED
Motor Lead Quantity/Wire Size	9 @ 18 AWG
Motor Lead Termination	Flying Leads
Motor Standards	NEMA
Motor Type	3522M
Mounting Arrangement	F1
Number of Poles	6
Overall Length	12.78 IN
Power Factor	57
Product Family	WD All SD Non-Encapsulated
Pulley End Bearing Type	Sealed Bearing
Pulley Face Code	C-Face
Pulley Shaft Indicator	Standard
Rodent Screen	None
Service Factor	1.15
Shaft Diameter	0.625 IN
Shaft Ground Indicator	No Shaft Grounding
Shaft Rotation	Reversible
Shaft Slinger Indicator	No Slinger
Speed	1175 rpm
Speed Code	Single Speed
Starting Method	Direct on line
Thermal Device - Bearing	None
Thermal Device - Winding	None

Vibration Sensor Indicator	No Vibration Sensor
Winding Thermal 1	None
Winding Thermal 2	None

Nameplate

NP4427ALA01												
CAT #	CFSWDM3539-E			**WT**	37	**LBS**						
SPEC	35E4735G337G1			**ENCL**	TENV							
SER #				**CC**		**IP**	69					
HP	.5			**MAG CUR**	1.4-1.6/.8							
VOLTS	208-230/460					**NEMA NOM. EFF**		77				
AMPS	2/1					**PF**	57					
RATING	40C AMB-CONT											
RPM	1175					**MAX RPM**	1800					
FRAME	56C	**HZ**	60	**CODE**	M	**CLASS**	H					
SER.F.	1.15	**SF AMP**	2.2/1.1			**PH**	3	**DES**	B			
DE	6205			**ODE**	6205							
LUBRICATION	POLYREX EM											
ID LOGO		**INVERTER TYPE**		**VPWM**		**CHP**	60	**TO**	90	1.5:1		
ID LOGO	**WK2**	0.159	**CT**	15	**TO**	60		4:1				
ID LOGO	**SL HZ**	1	**VT**	3	**TO**	60		20:1				
									QR			
YR												

AC Induction Motor Performance Data
Record # 87741
Preliminary Data Sheet

Winding: 35WGG337-R001	**Type:** 3522M	**Enclosure:** TENV

Nameplate Data				**460 V, 60 Hz: High Voltage Connection**	
Rated Output (HP)			.5	**Full Load Torque**	2.23 LB-FT
Volts			208-230/460	**Start Configuration**	direct on line
Full Load Amps			2/1	**Breakdown Torque**	8.81 LB-FT
R.P.M.			1175	**Pull-up Torque**	4.83 LB-FT
Hz	60	**Phase**	3	**Locked-rotor Torque**	5.16 LB-FT
NEMA Design Code	B	**KVA Code**	M	**Starting Current**	6.64 A
Service Factor (S.F.)			1.15	**No-load Current**	0.789 A
NEMA Nom. Eff.	77	**Power Factor**	57	**Line-line Res. @ 25ºC**	30 Ω
Rating - Duty			40C AMB-CONT	**Temp. Rise @ Rated Load**	70°C
S.F. Amps			2.2/1.1	**Temp. Rise @ S.F. Load**	80°C
				Locked-rotor Power Factor	50.7
				Rotor inertia	0.16 lb-ft²

Load Characteristics 460 V, 60 Hz, 0.5 HP

% of Rated Load	**25**	**50**	**75**	**100**	**125**	**150**	**S.F.**
Power Factor	23	36	48	56	63	68	73
Efficiency	63.7	75.6	79.4	81.4	81.5	80.6	79.6
Speed	1194	1190	1185	1180	1174	1167	1156
Line amperes	0.802	0.855	0.929	1.02	1.14	1.29	1.48

ABB Motors and Mechanical Inc.

WINDING # 35WGG337

0.5 HP 3 PH 60 HZ 1175 RPM 460 V 3522M

Typical performance - not guaranteed values.

TORQUES(LB-FT): PO=8.81 PU=4.83 LR=5.16 LRA=6.64

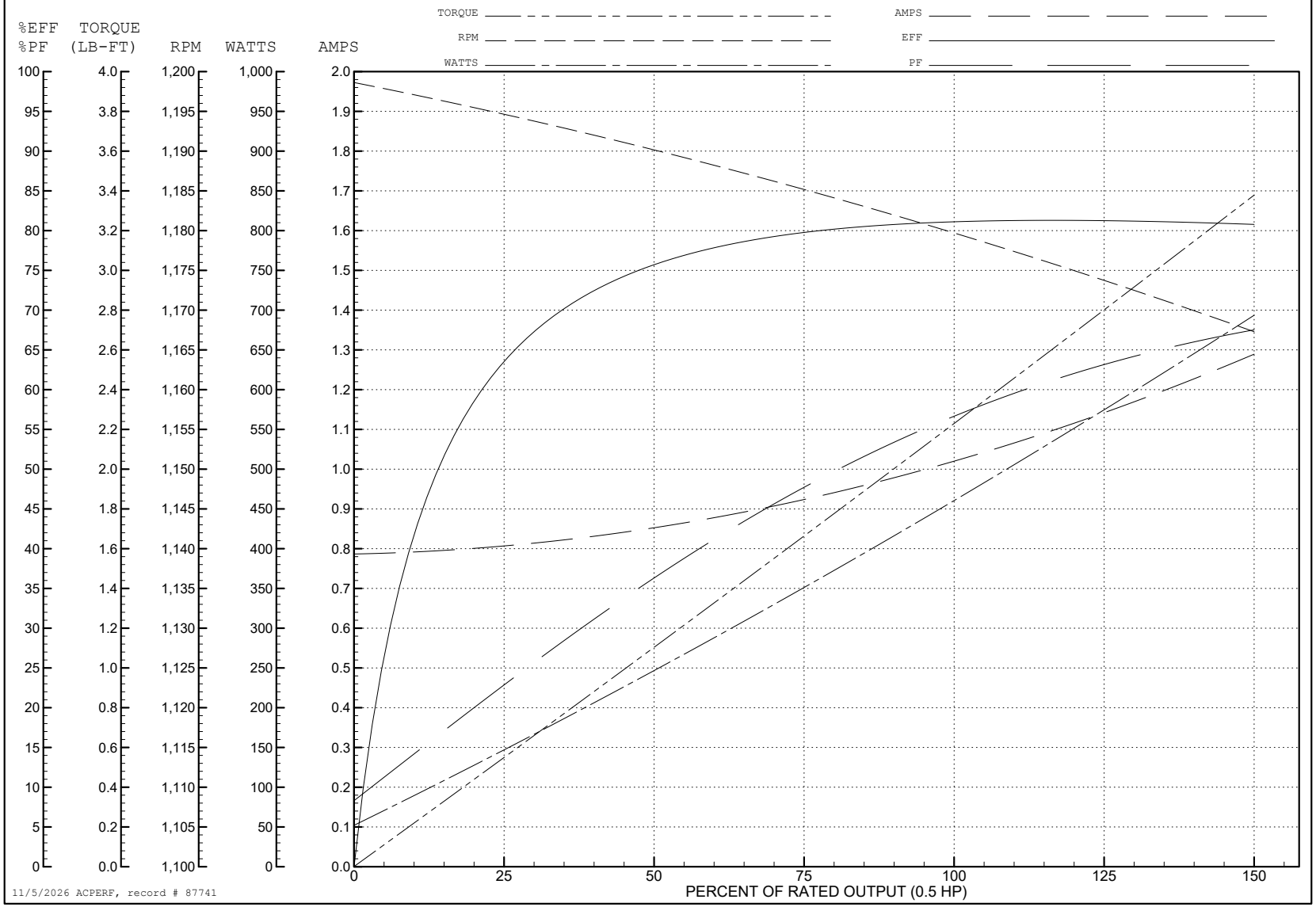

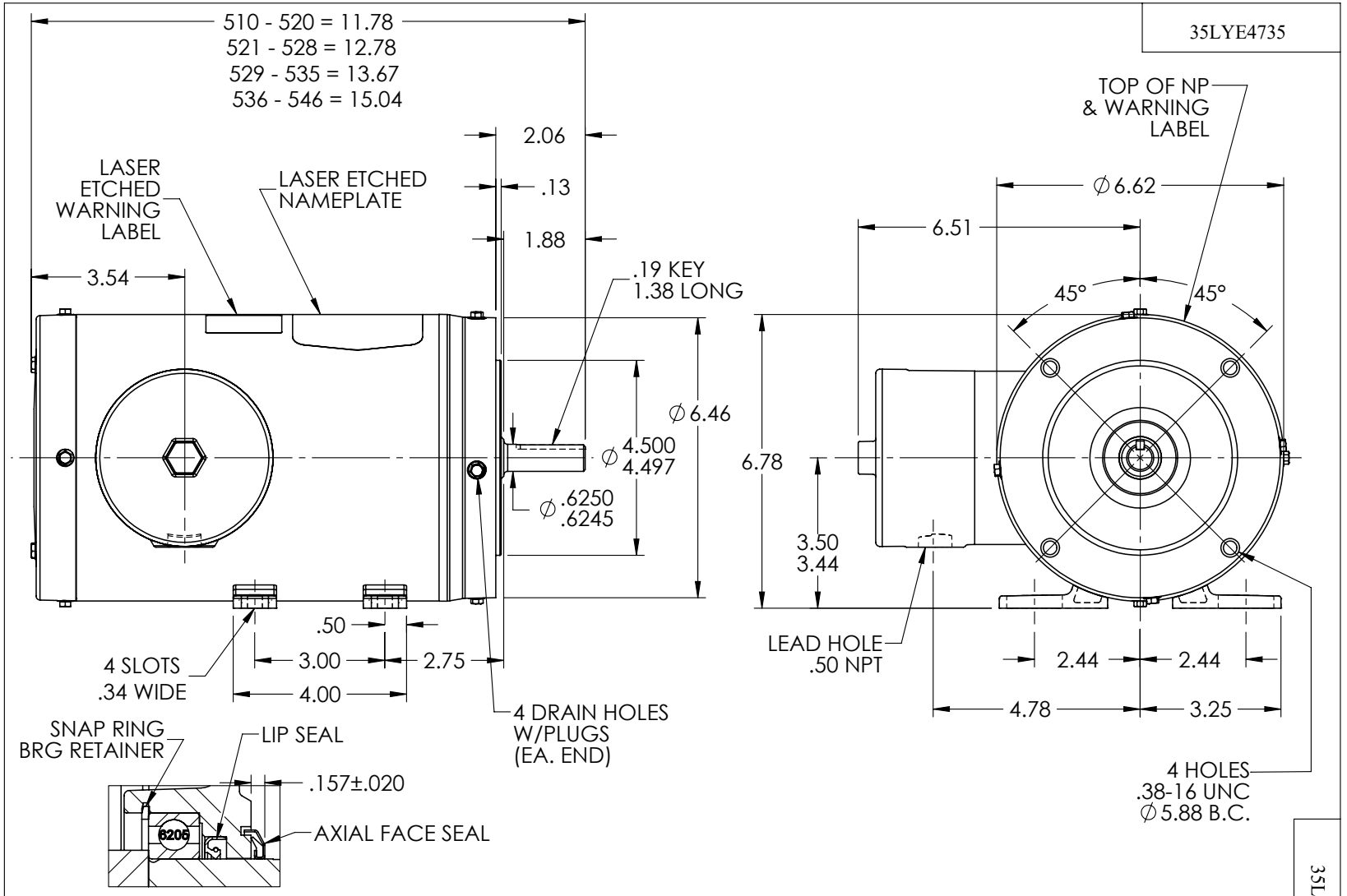
35LYE4735
510 - 520 = 11.78
521 - 528 = 12.78
529 - 535 = 13.67
536 - 546 = 15.04
2.06
.13
1.88
LASER ETCHED WARNING LABEL
LASER ETCHED NAMEPLATE
3.54
.19 KEY 1.38 LONG
∅6.46
∅4.500 4.497
∅.6250 .6245
.50
3.00
2.75
4.00
4 SLOTS .34 WIDE
4 DRAIN HOLES W/PLUGS (EA. END)
SNAP RING BRG RETAINER
LIP SEAL
.157±.020
AXIAL FACE SEAL
6206
PULLEY END DETAIL
TOP OF NP & WARNING LABEL
∅6.62
6.51
45°
45°
6.78
3.50
3.44
LEAD HOLE .50 NPT
2.44
2.44
4.78
3.25
4 HOLES .38-16 UNC ∅5.88 B.C.
CUSTOMER IS RESPONSIBLE FOR DETERMINING THAT THE PRODUCT WILL PERFORM SUITABLY IN THE INTENDED APPLICATION
REV. DESC: ADD DIM TO AXIAL SEAL LOCATION
REV: E
VERSION: 05
REVISED: 11:46:52 07/23/2026
TDR: 000001276312
BALDOR - RELIANCE®
35LYE4735
MODEL NO. 35LYE4735
REF: -
BY: USALMAZ
STD HORZ 56C TENV 35M WD11/12
35LYE4735

CD0005

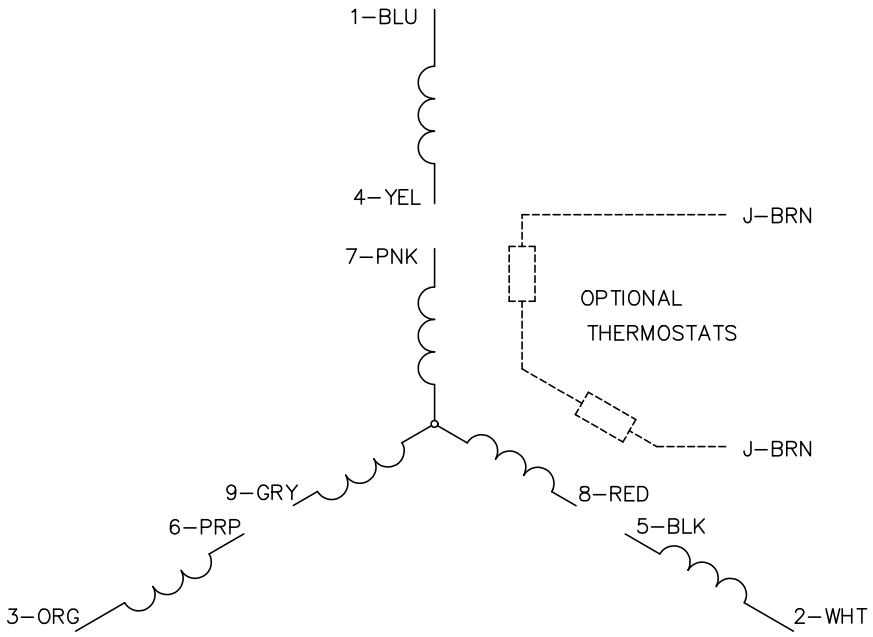

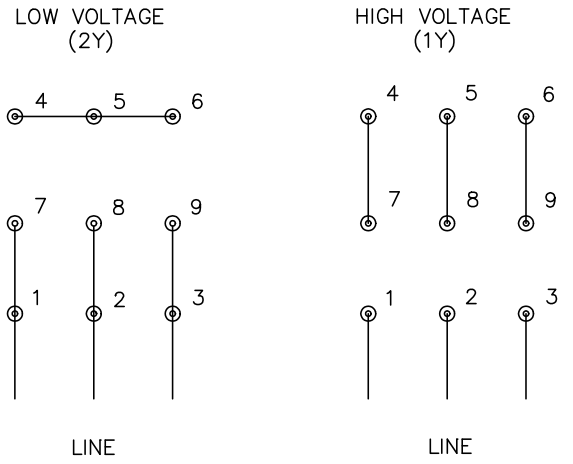

NOTES:

1. INTERCHANGE ANY TWO LINE LEADS TO REVERSE ROTATION.
2. OPTIONAL THERMOSTATS ARE PROVIDED WHEN SPECIFIED.
3. ACTUAL NUMBER OF INTERNAL PARALLEL CIRCUITS MAY BE A MULTIPLE OF THOSE SHOWN ABOVE.
4. LEAD COLORS ARE OPTIONAL. LEADS MUST ALWAYS BE NUMBERED AS SHOWN.

CD0005

REV. DESC: REVISE TO SHOW OPTIONAL COLORS			BALDOR ELECTRIC Co.
REV. LTR: E	BY: JLP	REVISED: 01/19/99 10:15	TDR: 0171435
CD0005		FILE: AAA00005140	MDL: –
		MTL: –	3PH, DV, 9 LEADS