ABB BALDOR RELIANCE

Customer information packet

XM050342A

0.333HP, 1725RPM, 3PH, 60HZ, 56, XPFC, F1
Class - CLI GP D; CLII GP F,G
Division - Division I

Copyright © All product information within this document is subject to ABB Motors and Mechanical Inc. copyright © protection, unless otherwise noted.
11/5/2026 11:53:42 AM

Specifications

Enclosure	XPFC
Frame	56
Frame Material	Steel
Frequency	60.00 Hz
Haz Area Class and Group	CLI GP D; CLII GP F,G
Haz Area Division	Division I
Motor Letter Type	Three Phase
Output @ Frequency	.330 HP @ 60 HZ
Phase	3
Synchronous Speed @ Frequency	1800 RPM @ 60 HZ
Voltage @ Frequency	460.0 V @ 60 HZ
	208.0 V @ 60 HZ
	230.0 V @ 60 HZ
Agency Approvals	CSA
	UL
Ambient Temperature	40 °C
Auxiliary Box	NO AUXILLARY BOX
Auxiliary Box Lead Termination	None
Base Indicator	Rigid
Bearing Grease Type	Polyrex EM (-20F +300F)
Blower	None
Current @ Voltage	.800 A @ 460.0 V
	1.600 A @ 230.0 V
	1.800 A @ 208.0 V
Design Code	B
Drip Cover	No Drip Cover
Duty Rating	CONT
Efficiency @ 100% Load	67.0 %
Electrically Isolated Bearing	Not Electrically Isolated
Feedback Device	NO FEEDBACK
Haz Area Temp Code	T3C
Heater Indicator	No Heater

Part Detail

Revision	F
Type	AC
Mech. spec.	
Base	
Status	PRD/A
Elec. spec.	34WG5723
Layout	34LY5323
Eff. date	05-01-2024
CD Diagram	CD0007
Poles	04
Leads	12#18
Proprietary	False
Created date	08-05-2020

High Voltage Full Load Amps	0.8 a
Insulation Class	B
Inverter Code	Not Inverter
IP Rating	NONE
KVA Code	L
Lifting Lugs	No Lifting Lugs
Locked Bearing Indicator	No Locked Bearing
Motor Lead Termination	Flying Leads
Motor Standards	NEMA
Motor Type	3413M
Mounting Arrangement	F1
Number of Poles	4
Overall Length	13.22 IN
Power Factor	57
Product Family	Hazardous Location Motor
Pulley Face Code	Standard
Rodent Screen	None
Service Factor	1.00
Shaft Diameter	0.625 IN
Shaft Ground Indicator	No Shaft Grounding
Shaft Rotation	Reversible
Speed	1725 rpm
Speed Code	Single Speed
Starting Method	Direct on line
Thermal Device - Bearing	None
Thermal Device - Winding	None
Vibration Sensor Indicator	No Vibration Sensor
Winding Thermal 1	Automatic Thermal Overload
Winding Thermal 1 Location	EP
Winding Thermal 2	None

Nameplate

NP0016XPSL							
NO.			**CC**				
SER. #							
SPEC	34-0000-0383						
CAT.NO.	XM050342A						
H.P.	.33		**T. CODE**	T3C			
VOLTS	208-230/460						
AMPS	1.8-1.6/.8						
R.P.M.	1725 34WG5723						
HZ	60	**PH**	3	**CLASS**	B		
SER.F.	1.00	**DES**	B	**CODE**	L		
RATING	40C AMB-CONT						
FRAME	56			**NEMA NOM. EFF**	67		
	PF	57					
BLANK	NEMA MG-1 PART 5, IP54						

AC Induction Motor Performance Data
Record # 6820
Typical performance - not guaranteed values

Winding: 34WG5723-R001	**Type:** 3413M	**Enclosure:** XPFC

Nameplate Data			**460 V, 60 Hz: High Voltage Connection**	
Rated Output (HP)		.33	**Full Load Torque**	1 LB-FT
Volts		208-230/460	**Start Configuration**	direct on line
Full Load Amps		1.8-1.6/.8	**Breakdown Torque**	4.7 LB-FT
R.P.M.		1725	**Pull-up Torque**	3.35 LB-FT
Hz	60 **Phase**	3	**Locked-rotor Torque**	3.75 LB-FT
NEMA Design Code	B **KVA Code**	L	**Starting Current**	4.4 A
Service Factor (S.F.)		1	**No-load Current**	0.7 A
NEMA Nom. Eff.	67 **Power Factor**	57	**Line-line Res. @ 25ºC**	49.1 Ω
Rating - Duty		40C AMB-CONT	**Temp. Rise @ Rated Load**	47°C

Load Characteristics 460 V, 60 Hz, 0.33 HP

% of Rated Load	**25**	**50**	**75**	**100**	**125**	**150**
Power Factor	28	40	50	57	64	69
Efficiency	44	59	65	68	68	67
Speed	1788	1770	1760	1745	1730	1710
Line amperes	0.7	0.73	0.77	0.8	0.85	1

ABB Motors and Mechanical Inc.

WINDING # 34WG5723

0.33 HP 3 PH 60 HZ 1725 RPM 460 V 3413M

Typical performance - not guaranteed values.

TORQUES(LB-FT): PO=4.7 PU=3.35 LR=3.75 LRA=4.4

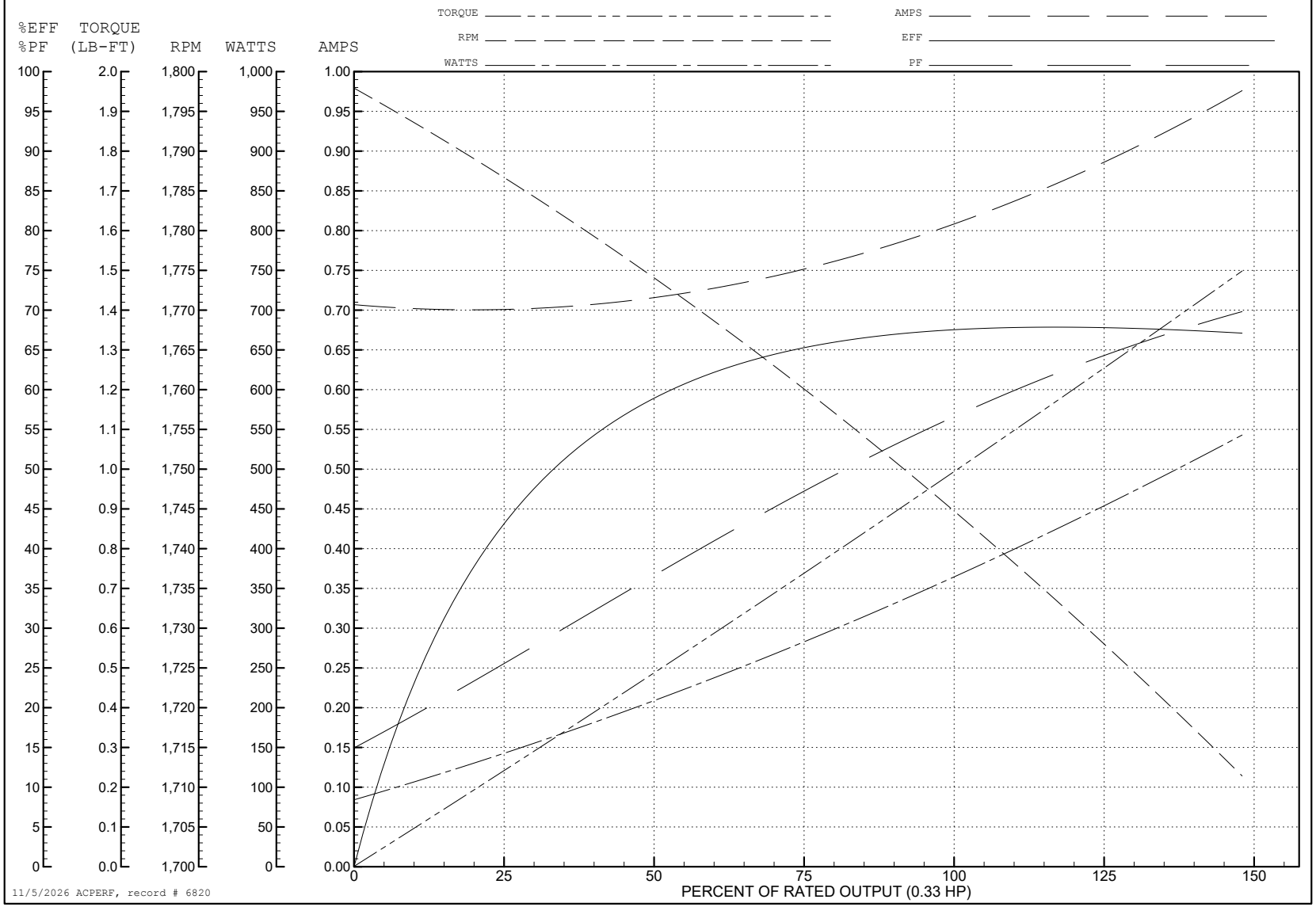

11/5/2026 ACPERF, record # 6820

AC Induction Motor Performance Data
Record # 65177
Typical performance - not guaranteed values

Winding: 34WG5723-R001	**Type:** 3413M	**Enclosure:** XPFC

Nameplate Data			
Rated Output (HP)			.33
Volts			208-230/460
Full Load Amps			1.8-1.6/.8
R.P.M.			1725
Hz	60	**Phase**	3
NEMA Design Code	B	**KVA Code**	L
Service Factor (S.F.)			1
NEMA Nom. Eff.	67	**Power Factor**	57
Rating - Duty			40C AMB-CONT

230 V, 60 Hz: Low Voltage Connection	
Full Load Torque	1 LB-FT
Start Configuration	direct on line
Breakdown Torque	4.7 LB-FT
Pull-up Torque	3.35 LB-FT
Locked-rotor Torque	3.75 LB-FT
Starting Current	8.8 A
No-load Current	1.4 A
Line-line Res. @ 25ºC	12.2 Ω
Temp. Rise @ Rated Load	47°C
Locked-rotor Power Factor	69.4
Rotor inertia	0.031 LB-FT2

Load Characteristics 230 V, 60 Hz, 0.33 HP

% of Rated Load	**25**	**50**	**75**	**100**	**125**	**150**
Power Factor	26	37	47	57	67	68
Efficiency	44.1	59	65.1	67.9	67.9	66.9
Speed	1788	1770	1760	1745	1730	1710
Line amperes	1.4	1.46	1.54	1.6	1.7	2

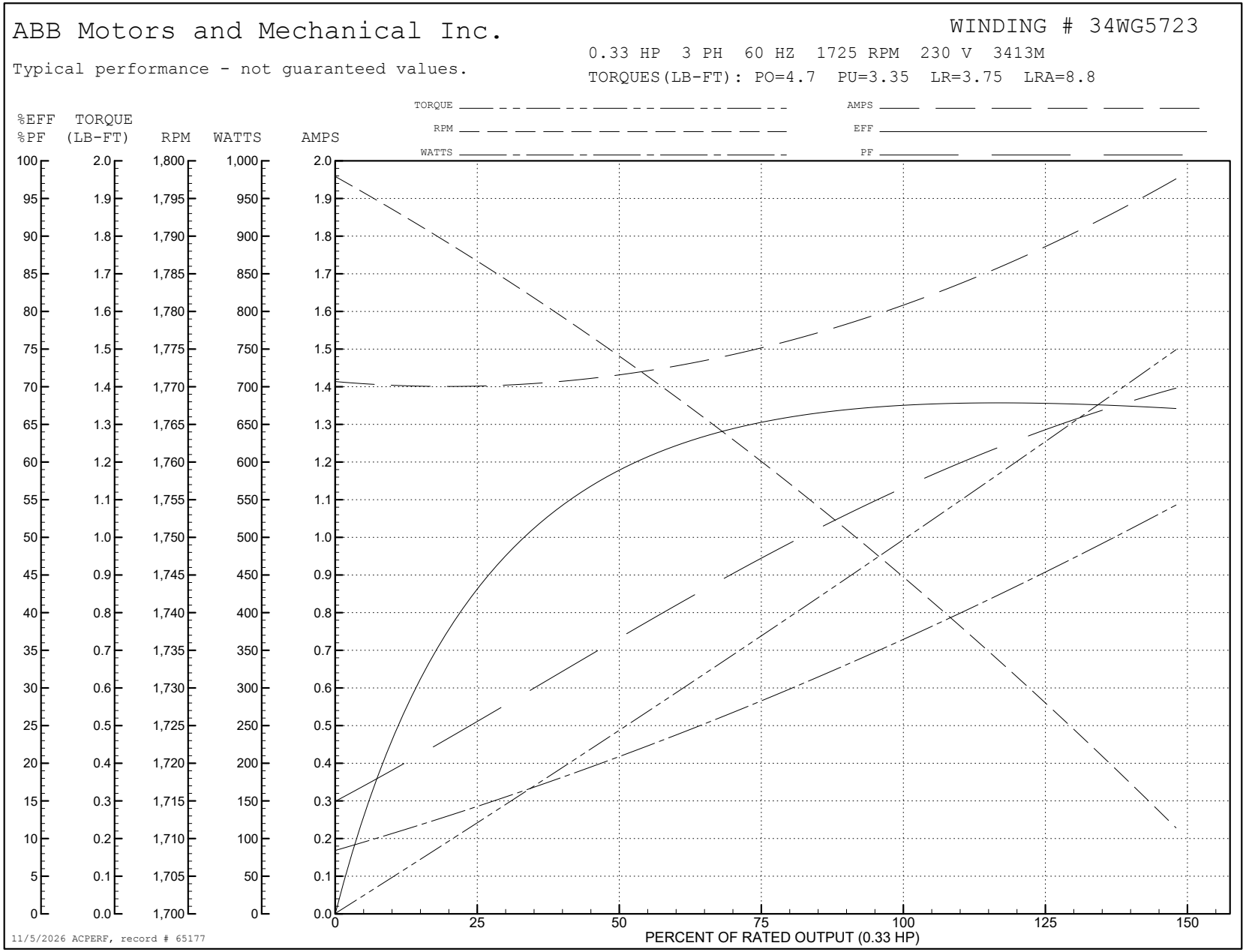
ABB Motors and Mechanical Inc.
WINDING # 34WG5723
Typical performance - not guaranteed values.
0.33 HP 3 PH 60 HZ 1725 RPM 230 V 3413M
TORQUES(LB-FT): PO=4.7 PU=3.35 LR=3.75 LRA=8.8
TORQUE
RPM
WATTS
AMPS
EFF
PF
%EFF %PF
TORQUE (LB-FT)
RPM
WATTS
AMPS
PERCENT OF RATED OUTPUT (0.33 HP)
11/5/2026 ACPERF, record # 65177

34LY5323

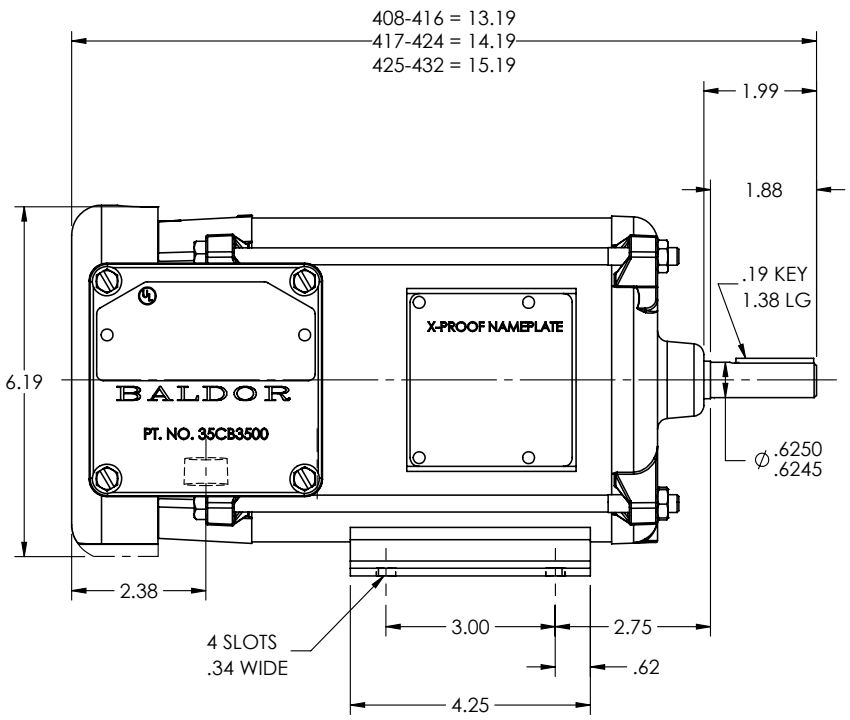

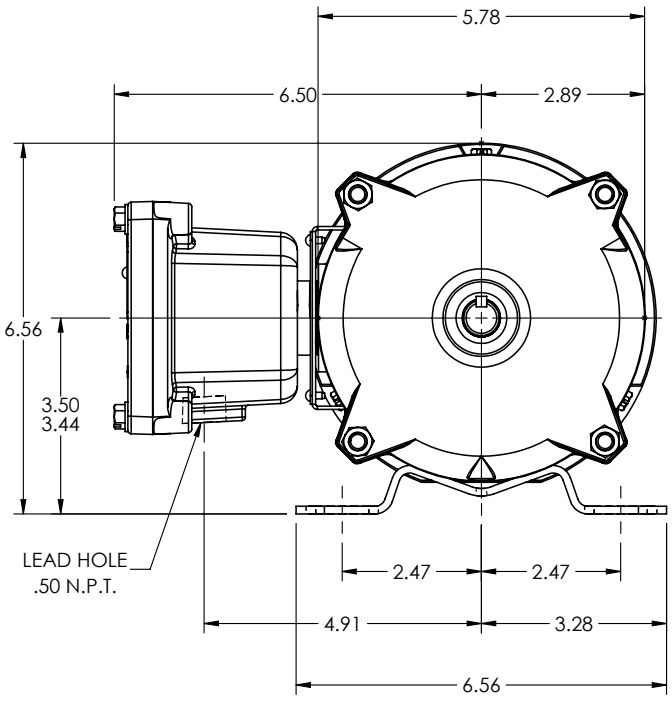

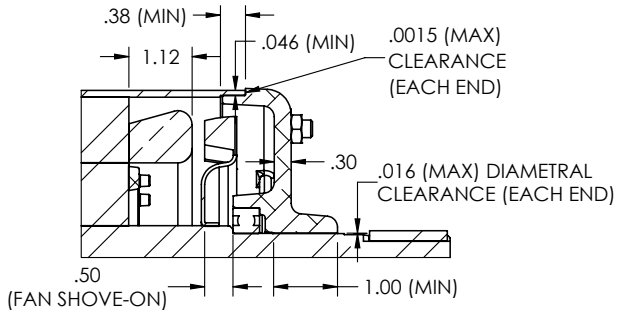

PULLEY END DETAIL

CUSTOMER IS RESPONSIBLE FOR DETERMINING THAT THE PRODUCT WILL PERFORM SUITABLY IN THE INTENDED APPLICATION

REV. DESC: LOAD TO SOLIDWORKS - REV K			
REV: L	VERSION: 08	REVISED: 12:27:48 12/15/2022	TDR: 000001201165
34LY5323	MODEL NO. 34LY5323		REF: -
	BY: ENFRAJ0		

BALDOR - RELIANCE®

HORZ X34M 56 XPFC CL-I GP-D, CL-II GP-F&G, .50 NPT LEAD

34LY5323

CD0007

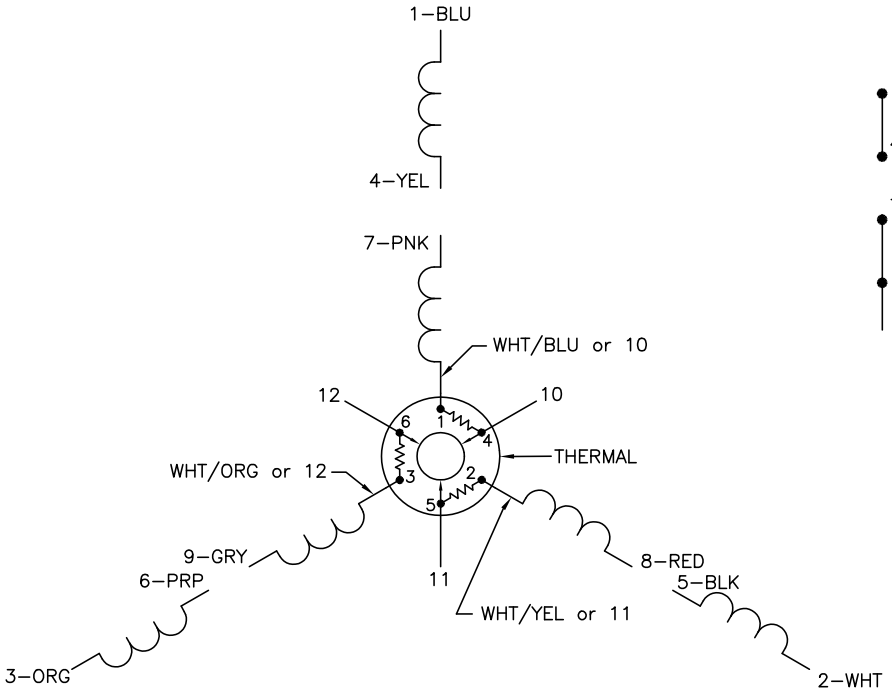

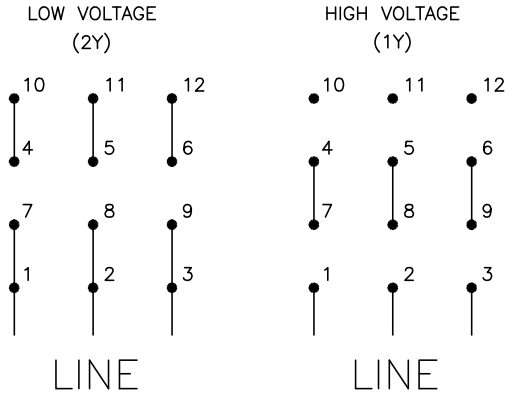

NOTES:

1. INTERCHANGE ANY TWO LINE LEADS TO REVERSE ROTATION.
2. ACTUAL NUMBER OF INTERNAL PARALLEL CIRCUITS MAY VARY.
3. LEAD COLORS ARE OPTIONAL. LEADS MUST ALWAYS BE NUMBERED AS SHOWN.

REV. DESC: ADDED "CK" PLANT CODE			BALDOR ELECTRIC Co.
REV. LTR: E	BY: EAH	REVISED: 05/06/99 17:1	TDR: 0181040
CD0007		FILE: AAA00008370	MDL: –
		MTL: –	3PH, DV, THERMAL, 12 LEADS

CD0007