RANGE DIAGRAM

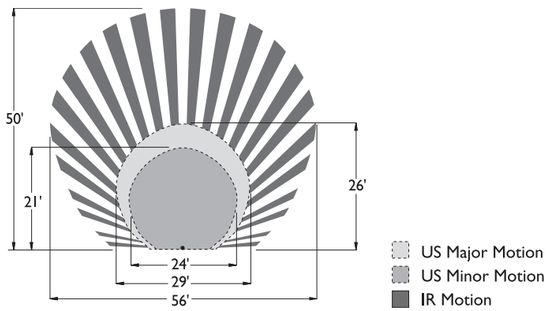

WIRING DIAGRAM

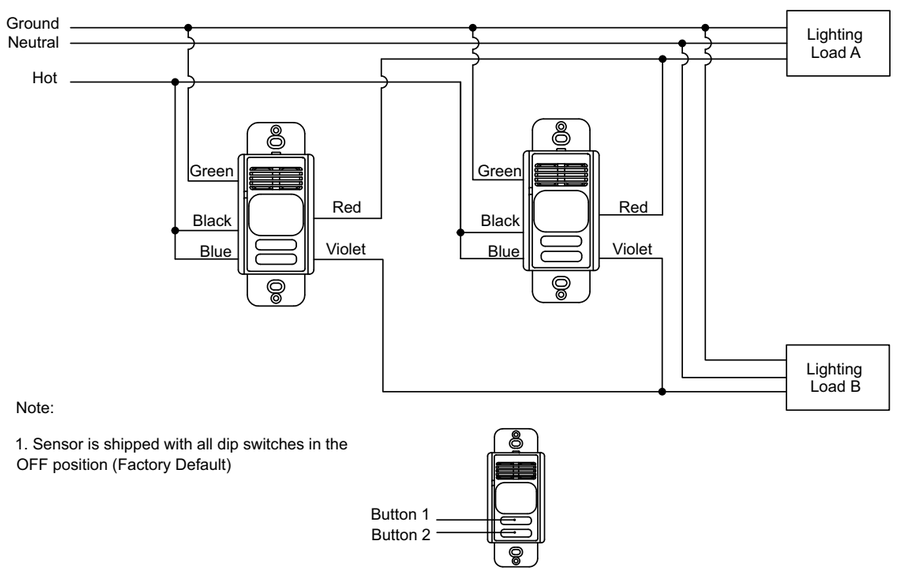

Note:

1. Sensor is shipped with all dip switches in the OFF position (Factory Default)

NOTES

LHUSS

LightHawk™ Ultrasonic Wall Switch Sensor featuring IntelliDAPT®

LHUSS1 LHUSS0

KEY FEATURES

- All-digital ultrasonic (US) sensor
- IntelliDAPT self-adaptive technology—no manual adjustment required
- 2 relays for two-level switching or dual-circuit control
- Auto-on and manual-on operating modes (depending on model)
- 400 square-foot, 180° coverage area
- Built-in photocell with SuperSaver™ mode
- California Title 24 compliant

SPECIFICATIONS

IntelliDAPT technology	• Self-adjusting timer • Self-adjusting ultrasonic (US) sensitivity • Automatic false-on/false-off corrections • No manual adjustments required
Timer timeout	• Auto mode: 4–30 minutes; self-adjusts based on occupancy • Fixed mode: 4, 8, 15, and 30 minutes • Test mode: 5 seconds
Ultrasonic (US) output	• 40kHz output
Photocell	• Natural-light override range: 10–500 foot-candles
Coverage	• 400 square-foot, 180° coverage area
Power requirements	• 120/277VAC; 50/60Hz
Electrical ratings	• 120VAC: 800W Incandescent; 1,000W Fluorescent; 1/6 HP • 277VAC: 1,800W Fluorescent; 1/6 HP
Load requirements	• No minimum load
Operating environment	• Indoor use only • Operating temperature: 32°–104°F (0°–40°C) • Relative humidity (non-condensing): 0–95%
Construction	• Casing—high-impact injection-molded plastic (UL-94-5V) • Color-coded leads are 6″ long
Size and weight	• Size: 4.2″ x 1.8″ x 2.1″; .37″ extension • Weight: 2.9 oz
Color	• White; Ivory; Light Almond; Gray; Black
Mounting	• Single-gang NEMA-style switch box (average switch box) • (Decorator-style wall plate not included)
Certifications	• ETL, UL, and cUL listed

ORDERING INFORMATION

LH	US	S		
MODEL	TECHNOLOGY	CONTROL	NO. OF BUTTONS	BUTTONS
LH LightHAWK™	US Ultrasonic	S Single Circuit	2 0	W White I Ivory A Light Almond G Gray B Black