ABB BALDOR RELIANCE

Customer information packet

ECS100T4H7FB4

7.5HP, 1800RPM, 3PH, 60HZ, 213TC, TEFC, TOP
Class - None
Division - Not Applicable

Copyright © All product information within this document is subject to ABB Motors and Mechanical Inc. copyright © protection, unless otherwise noted.
11/5/2026 11:43:32 AM

Specifications

Enclosure	TEFC
Frame	213TC
Frame Material	Steel
Frequency	60.00 Hz
Haz Area Class and Group	None
Haz Area Division	Not Applicable
Motor Letter Type	Three Phase
Output @ Frequency	7.500 HP @ 60 HZ
Phase	3
Synchronous Speed @ Frequency	1800 RPM @ 60 HZ
Voltage @ Frequency	460.0 V @ 60 HZ
Agency Approvals	UL
	WEEE
Ambient Temperature	40 °C
Auxiliary Box	NO AUXILLARY BOX
Auxiliary Box Lead Termination	None
Base Indicator	Rigid
Bearing Grease Type	Polyrex EM (-20F +300F)
Blower	None
Constant Torque Speed Range	6
Current @ Voltage	8.700 A @ 460.0 V
Drip Cover	No Drip Cover
Duty Rating	CONT
Efficiency @ 100% Load	94.7 %
Electrically Isolated Bearing	Not Electrically Isolated
Feedback Device	NO FEEDBACK
Heater Indicator	No Heater
High Voltage Full Load Amps	8.7 a
Insulation Class	F
Inverter Code	Inverter Duty
IP Rating	NONE
Lifting Lugs	Standard Lifting Lugs

Part Detail

Revision	H
Type	AC
Mech. spec.	
Base	
Status	PRD/A
Elec. spec.	37WGA0020
Layout	37LYQ485
Eff. date	06-16-2025
CD Diagram	CD0006B03
Poles	04
Leads	3#12 19" LONG LEADS
Proprietary	False
Created date	08-31-2020

Locked Bearing Indicator	Locked Bearing
Motor Lead Termination	Flying Leads
Motor Standards	NEMA
Motor Type	3730B
Mounting Arrangement	F1
Number of Poles	4
Overall Length	18.84 IN
Power Factor	92
Product Family	General Purpose
Pulley Face Code	C-Face
Rodent Screen	None
Service Factor	1.00
Shaft Diameter	1.375 IN
Shaft Ground Indicator	Shaft Grounding
Shaft Rotation	Reversible
Speed	1800 rpm
Speed Code	Single Speed
Starting Method	Direct on line
Thermal Device - Bearing	None
Thermal Device - Winding	None
Vibration Sensor Indicator	No Vibration Sensor
Winding Thermal 1	None
Winding Thermal 2	None

BALDOR·RELIANCE

EC-Titanium™

CAT. NO.	ECS100T4H7FB4						
SPEC.	37-0001565				YR	***	
FRAME	213TC		ENCL.	TEFC	IP	54	
HP	7.5	RATING	40C AMB-CONT				
NOM. EFF.	94.7	PF	92	SF	1.0		
VOLTS	460		FLA	8.874			
RPM	1800		RPM MAX	3000			
HZ	60		PH.	3	CLASS	F	
BEMF (V)	216		Rs (Ω)	1.39			
Ld (mH)	28.09		Lq (mH)	80.586			
INV TYP	VPWM	CHP	60 TO 100 HZ				
	CT	6 TO 60 HZ	VT	1 TO 100 HZ			
MATCHED INV	EC14A9P5						
BEARING	DE	6307	ODE	6206			
SERIAL#	***						

FERRITE ASSISTED
SYNCHRONOUS RELUCTANCE MOTOR
FOR INVERTER USE ONLY

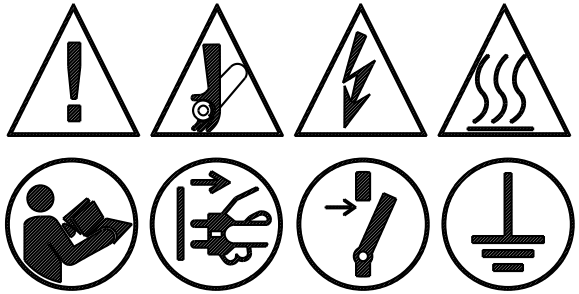

PERMANENT MAGNET MOTOR. WHEN SHAFT IS ROTATED, VOLTAGE WILL BE GENERATED AT THE MOTOR TERMINALS.
MOTEUR Á AIMANT PERMANENT. LORSQUE L'ARBRE TOURNE, UNE TENSION SERA GÉNÉRÉE AUX BORNES DU MOTEUR.

BALDOR-RELIANCE
SHAFT GROUNDING BRUSH INSTALLED

c UL us LISTED
E46145

ELECTRONICALLY PROTECTED MOTOR
FOR INDUSTRIAL USE

ABB MOTORS AND MECHANICAL INC.
5711 R.S. BOREHAM JR. ST., FORT SMITH, AR. MFG IN U.S.A.

BALDOR • RELIANCE

EC-Titanium™

PART NO.	EC14A9P5				
U1	480	PH	3	HZ	60
I1 MAX	9.5	W/EXT. CHOKE			7.6
SERIAL #	***				



POWER DOWN FOR
5 MINUTES BEFORE
REMOVING COVER

METTRE HORS TENSION
PENDANT 5 MINUTES
AVANT DE RETIRER LE
COUVERCLE

ABB MOTORS AND MECHANICAL
INC. FORT SMITH, AR.
MFG. IN U.S.A.

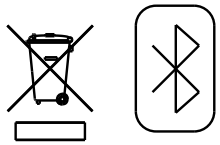

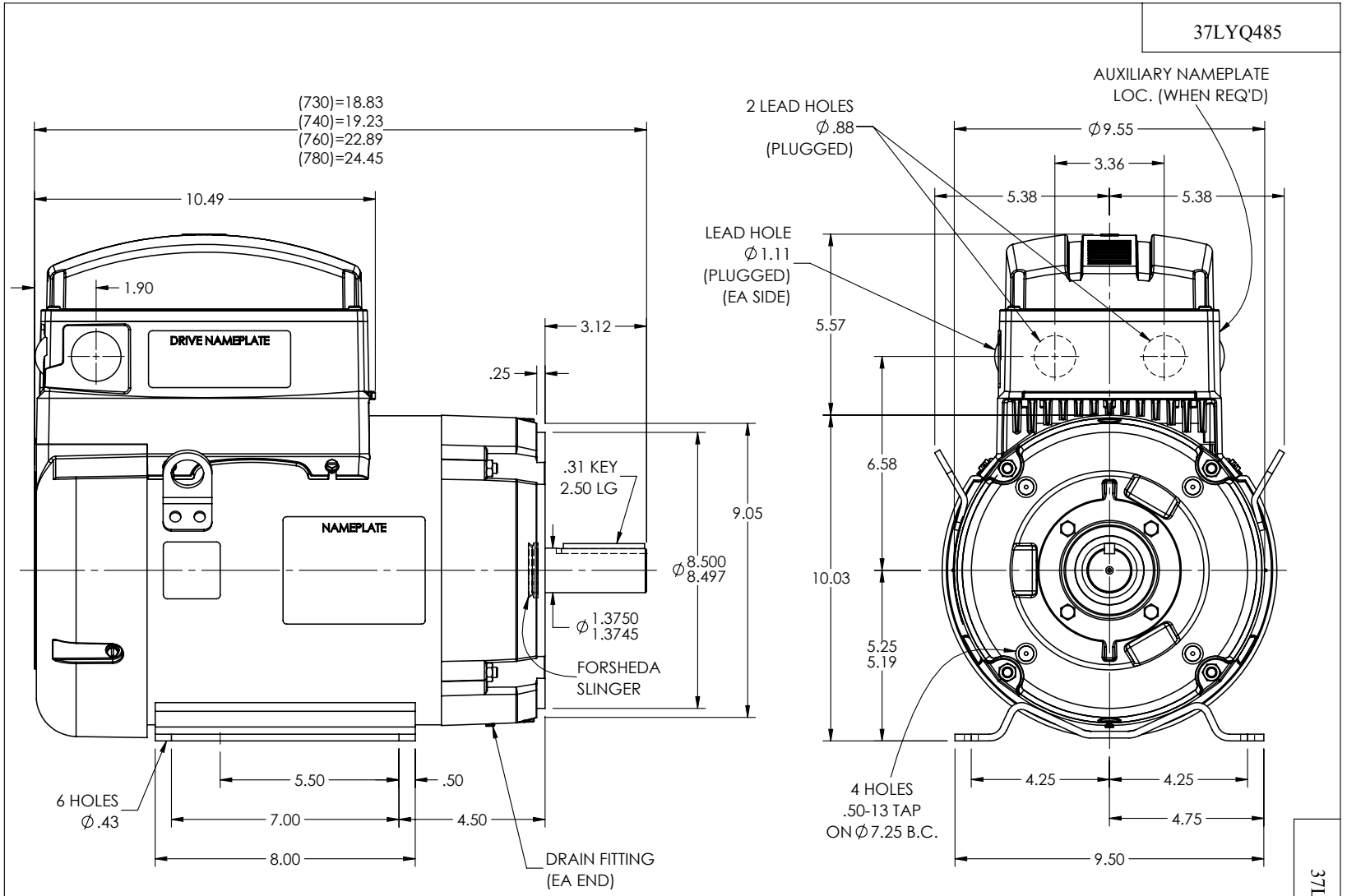
37LYQ485
(730)=18.83
(740)=19.23
(760)=22.89
(780)=24.45
10.49
1.90
DRIVE NAMEPLATE
NAMEPLATE
3.12
.25
.31 KEY
2.50 LG
9.05
Ø8.500
8.497
Ø1.3750
1.3745
FORSHEDA
SLINGER
6 HOLES
Ø.43
5.50
.50
7.00
4.50
8.00
DRAIN FITTING
(EA END)
2 LEAD HOLES
Ø.88
(PLUGGED)
AUXILIARY NAMEPLATE
LOC. (WHEN REQ'D)
Ø9.55
3.36
5.38
5.38
LEAD HOLE
Ø1.11
(PLUGGED)
(EA SIDE)
5.57
6.58
10.03
5.25
5.19
4 HOLES
.50-13 TAP
ON Ø7.25 B.C.
4.25
4.25
4.75
9.50
37LYQ485
REV. DESC: UPDATE DRAWING GRAPHICS
REV: D
VERSION: 04
REVISED: 03:30:33 04/19/2022
TDR: 000001189579
37LYQ485
MODEL NO. 37LYQ485
REF: -
BY: ENJEFD0
BALDOR - RELIANCE®
HOR 213-5TC TEFC B TOP MOUNT DRV INT SH GND ECS
37LYQ485

36CB3501A00

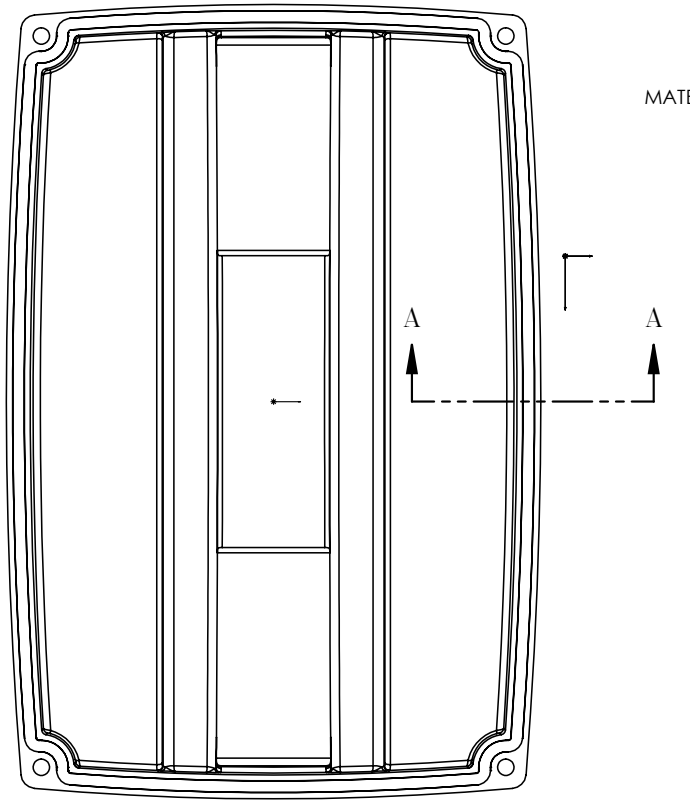

MATERIAL: RAMPF, RAKU-PUR 32-3280-51L

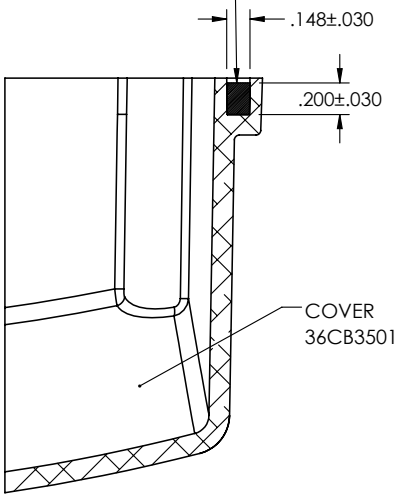

SECTION A–A

36CB3501A00

REV. DESC: UPDATE MATERIAL			
REV: A	VERSION: 01	REVISED: 10:46:37 03/29/2019	TDR: 000001101646
	MODEL NO. 36CB3501A00		REF: -
	BY: ENMARS0	Material: -	

BALDOR - RELIANCE®

36 & 37 FRAME TOP ECM COVER WITH FOAM SEAL

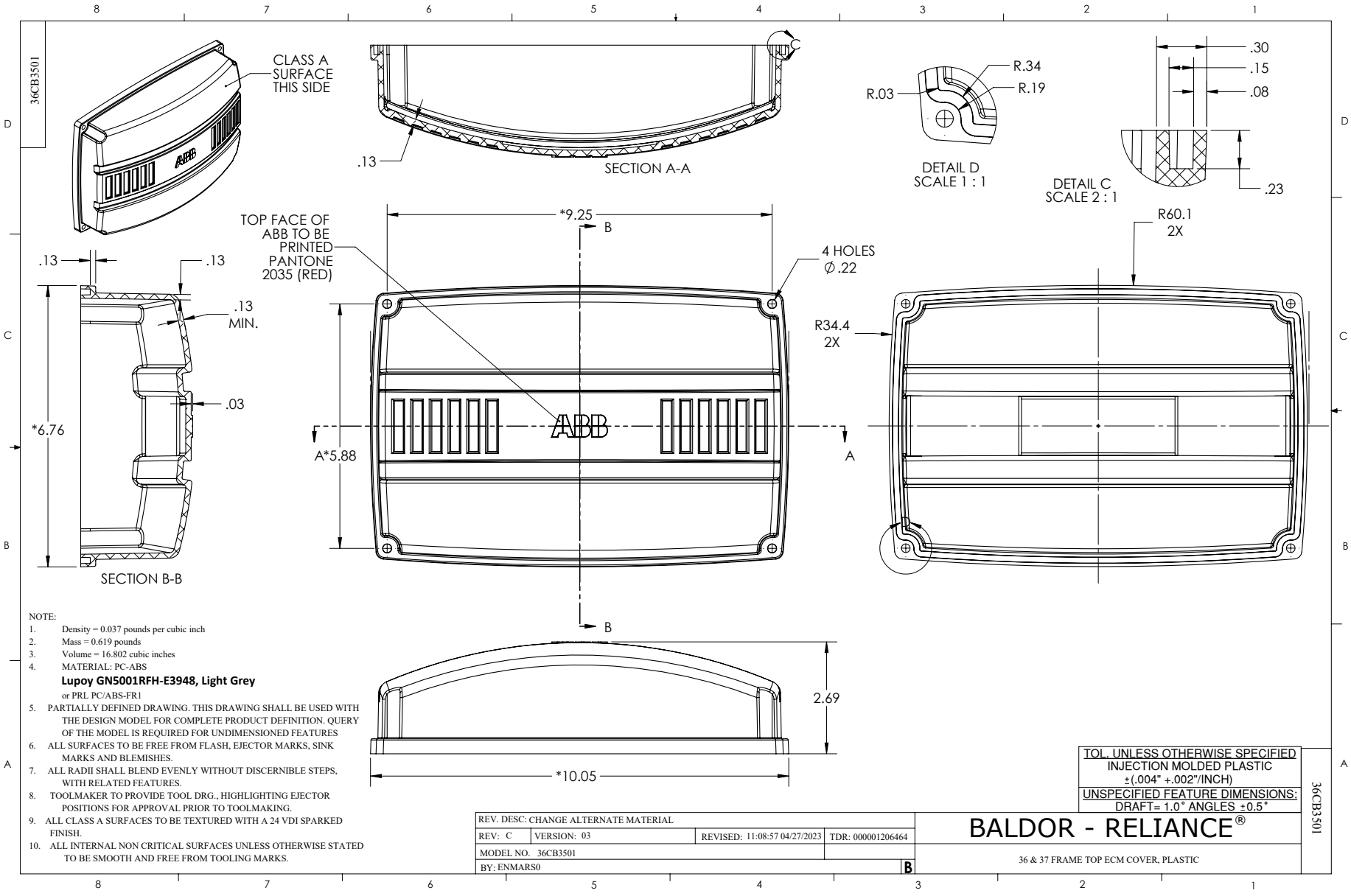

NOTE:
1. Density = 0.037 pounds per cubic inch
2. Mass = 0.619 pounds
3. Volume = 16.802 cubic inches
4. MATERIAL: PC-ABS
   Lupoy GN5001RFH-E3948, Light Grey
   or PRL PC/ABS-FR1
5. PARTIALLY DEFINED DRAWING. THIS DRAWING SHALL BE USED WITH THE DESIGN MODEL FOR COMPLETE PRODUCT DEFINITION. QUERY OF THE MODEL IS REQUIRED FOR UNDIMENSIONED FEATURES
6. ALL SURFACES TO BE FREE FROM FLASH, EJECTOR MARKS, SINK MARKS AND BLEMISHES.
7. ALL RADII SHALL BLEND EVENLY WITHOUT DISCERNIBLE STEPS, WITH RELATED FEATURES.
8. TOOLMAKER TO PROVIDE TOOL DRG., HIGHLIGHTING EJECTOR POSITIONS FOR APPROVAL PRIOR TO TOOLMAKING.
9. ALL CLASS A SURFACES TO BE TEXTURED WITH A 24 VDI SPARKED FINISH.
10. ALL INTERNAL NON CRITICAL SURFACES UNLESS OTHERWISE STATED TO BE SMOOTH AND FREE FROM TOOLING MARKS.

TOL. UNLESS OTHERWISE SPECIFIED
INJECTION MOLDED PLASTIC
±(.004" +.002"/INCH)
UNSPECIFIED FEATURE DIMENSIONS:
DRAFT= 1.0° ANGLES ±0.5°

REV. DESC: CHANGE ALTERNATE MATERIAL			
REV: C	VERSION: 03	REVISED: 11:08:57 04/27/2023	TDR: 000001206464
MODEL NO. 36CB3501			
BY: ENMARS0			B

BALDOR - RELIANCE®

36 & 37 FRAME TOP ECM COVER, PLASTIC

36CB3501

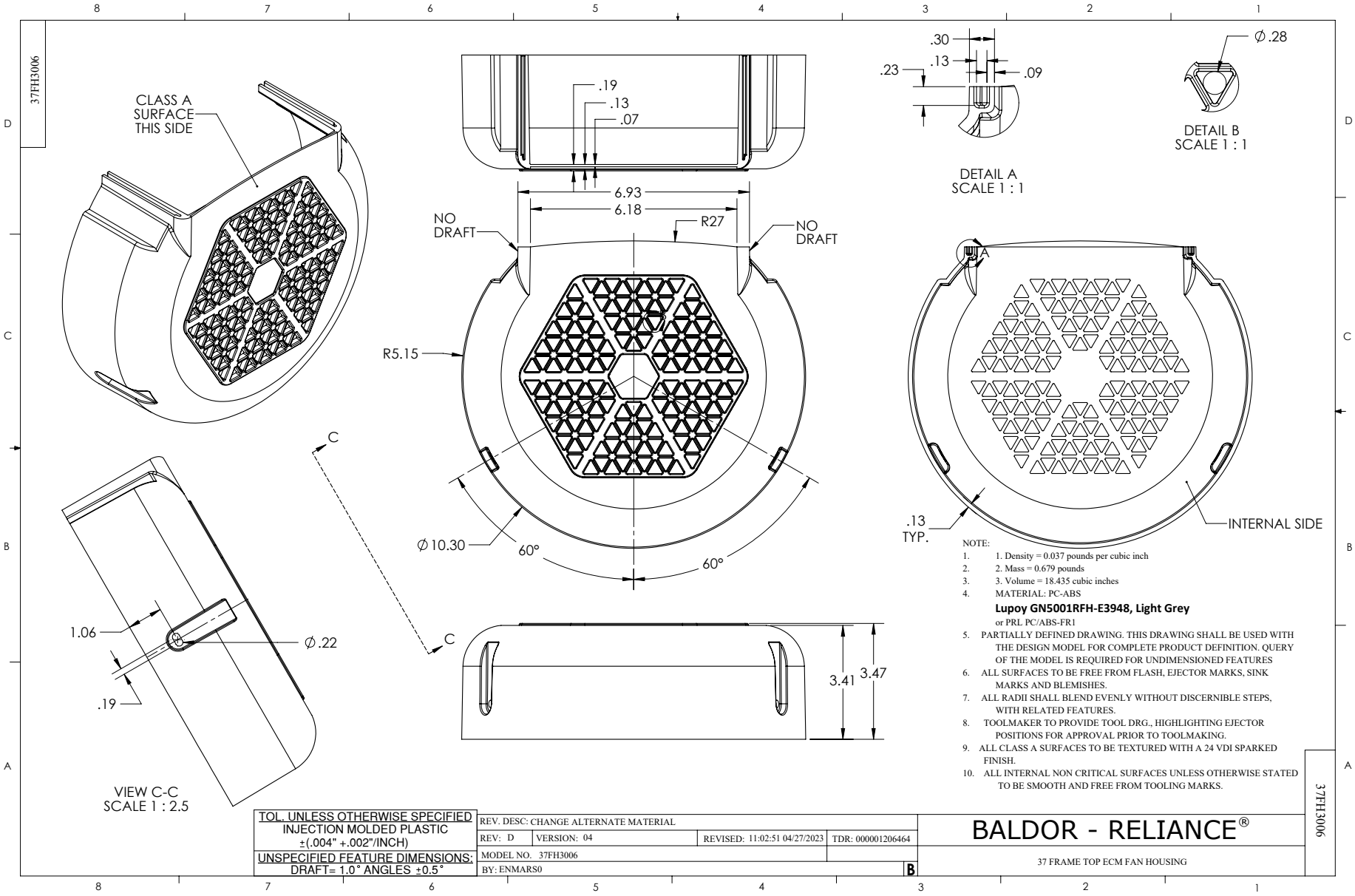

NOTE:
1. 1. Density = 0.037 pounds per cubic inch
2. 2. Mass = 0.679 pounds
3. 3. Volume = 18.435 cubic inches
4. MATERIAL: PC-ABS
   Lupoy GN5001RFH-E3948, Light Grey
   or PRL PC/ABS-FR1
5. PARTIALLY DEFINED DRAWING. THIS DRAWING SHALL BE USED WITH THE DESIGN MODEL FOR COMPLETE PRODUCT DEFINITION. QUERY OF THE MODEL IS REQUIRED FOR UNDIMENSIONED FEATURES
6. ALL SURFACES TO BE FREE FROM FLASH, EJECTOR MARKS, SINK MARKS AND BLEMISHES.
7. ALL RADII SHALL BLEND EVENLY WITHOUT DISCERNIBLE STEPS, WITH RELATED FEATURES.
8. TOOLMAKER TO PROVIDE TOOL DRG., HIGHLIGHTING EJECTOR POSITIONS FOR APPROVAL PRIOR TO TOOLMAKING.
9. ALL CLASS A SURFACES TO BE TEXTURED WITH A 24 VDI SPARKED FINISH.
10. ALL INTERNAL NON CRITICAL SURFACES UNLESS OTHERWISE STATED TO BE SMOOTH AND FREE FROM TOOLING MARKS.

TOL. UNLESS OTHERWISE SPECIFIED INJECTION MOLDED PLASTIC ±(.004" +.002"/INCH)	REV. DESC: CHANGE ALTERNATE MATERIAL		BALDOR - RELIANCE®
	REV: D VERSION: 04	REVISED: 11:02:51 04/27/2023 TDR: 000001206464	
UNSPECIFIED FEATURE DIMENSIONS: DRAFT= 1.0° ANGLES ±0.5°	MODEL NO. 37FH3006		37 FRAME TOP ECM FAN HOUSING
	BY: ENMARS0	B	37FH3006

CD0006B03

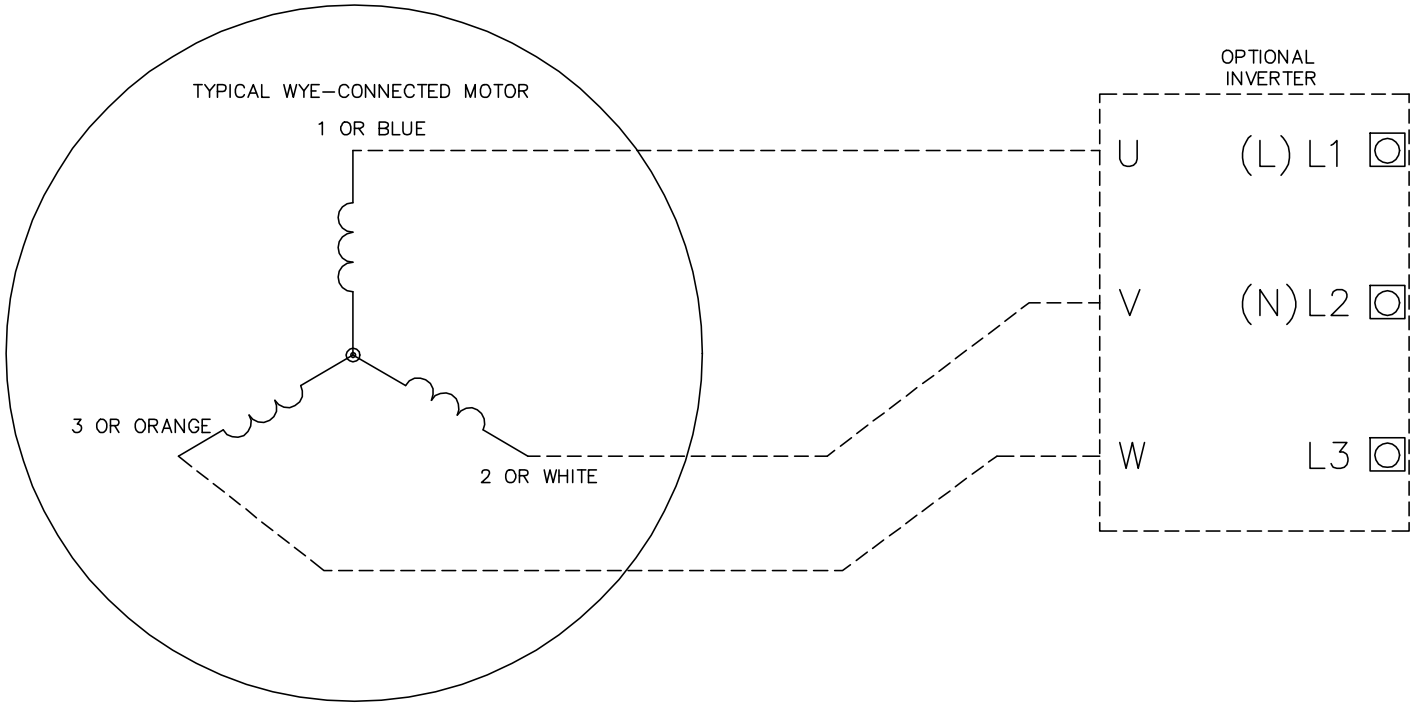

NOTES:

1. INTERCHANGE ANY TWO LINE LEADS TO REVERSE ROTATION.
2. ACTUAL NUMBER OF INTERNAL PARALLEL CIRCUITS MAY VARY.

CD0006B03

REV. DESC: CHANGE LEAD COLORS TO BLUE WHITE ORANGE		
REV. LTR: A	VERSION: 01	TDR: 000001158598
FILE: \AAA\00252\917	REVISED: 11:01:03 01/19/2021	BY: ENMARSO
MTL: –		

BALDOR - RELIANCE®

3PH, SV, 3 LEADS, WYE CONNECTED, ECS

SH 1 of 1