air choice

12’’ TABLE FAN

USER MANUAL

MODEL.: FD-1201L

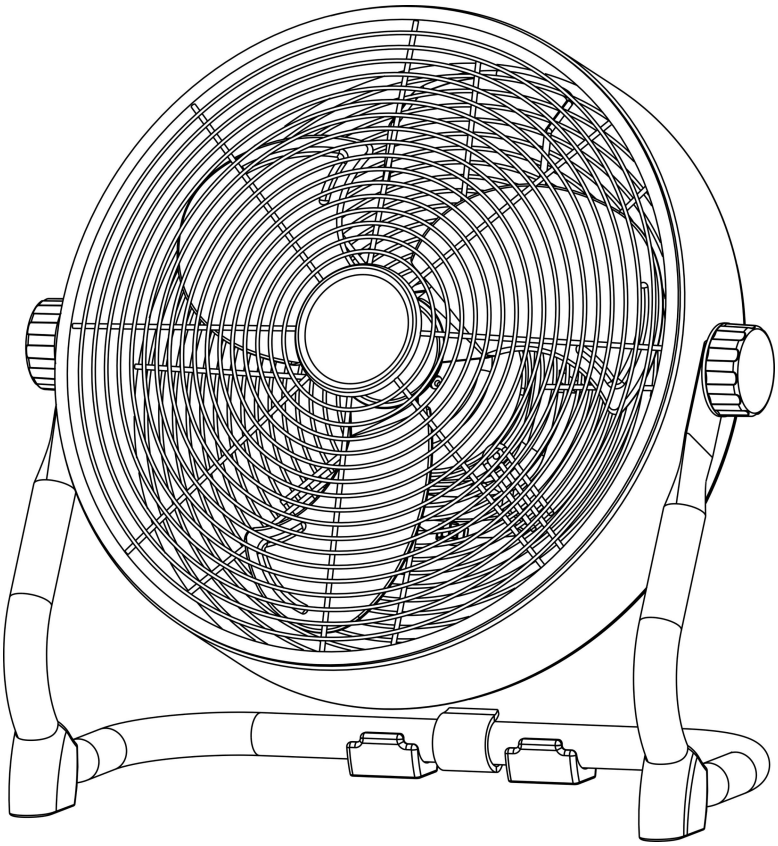

Introduction

- Please read this guidance carefully before using your fan , so that you can use it correctly.
- Please keep well with this guidance.

CAUTION FOR OPERATION:

1、If the product is accidentally flooded with water or other liquid, immediately turn off the fan power switch and let it completely dry. And then use it.

2、Do not knock or beat this product, repeated knocking may cause internal damage.

3、If you do not use this product for a long time, please do not store it in a hot and humid place.

4、Do not disassemble or repair the product by yourself.

5、Do not charge the product at a voltage exceeding the specified voltage.

6、Do not touch or use this product with wet hands.

7、Contact with other metals can cause heat, rupture, or fire.

8、Prevent the use of extension cables. If this is unavoidable, use an approved cable of sufficient capacity and unwind it completely.

9、Prevent the electrical cable from coming into contact with sharp, hot or moving objects. Do not wind it around the fan and do not wind it too tightly.

10、Make sure the fan is on a firm, level and horizontal surface during use.

11、Do not leave a working fan unattended in a room.

12、This device is not suitable for use in wet or damp areas such as bathrooms, washrooms, etc. Do not place it in the vicinity of a tap, bathtub, shower, swimming pool, wash basin or similar, make sure it can never fall into water and prevent water enters the device.

13、Never immerse the device, cord or plug in water or other liquid and do not touch the device, cord or plug with wet hands or feet.

14、Do not place the device in an open window in connection with. rain, not on wet surfaces and prevent moisture from being spilled on it.

15、Do not hang anything over or over the fan and do not use it in the vicinity of curtains, clothing or other materials that could cause the engine to crash. This can result in overheating or fire.

16、Ensure that long hair is not sucked into the fan.

17、Keep the suction and discharge grille clean and dust-free and ensure a minimum of 30 cm free space around the fan.

18、Make sure that there are no objects in the vicinity of the fan that can prevent oscillation.

19、Never put a finger, pen, stick or anything else through the protective grille into the working fan!

20、Do not spray any agents (anti-insect, cleaning or whatever) on or in the fan; this can cause physical complaints (especially with children!) or damage parts.

21、Do not store or use the device:

- In places where it can get wet or fall into water
- Near to highly flammable, explosive or gaseous substances
- Near acids, alkali, oil and other substances that can cause corrosion.

22、Do not connect the fan to a timer or a dimmer.

23、Do not use the fan at temperatures above 40℃, near heating equipment and in dusty areas.

24、This device can be used by children 8 years of age and older and persons with limited physical, sensory or mental abilities or lack of experience and knowledge if they have been supervised or have instructions on how to use the device in safely and understand the associated dangers.

25、Children must not play with the device.

26、Prevent the device from constantly blowing on small children, patients or people who have difficulty moving.
27、Cleaning and user maintenance shall not be made by children without supervision.
28、 Please make sure to unplug the charging cable when charging is finished.
29、Do not charge the product on the surface of inflammable objects such as carpets and quilts.
30、If the product cannot be charged, please try changing the charging head or charging cable.
31、If leakage occurs and your body comes into contact with the liquid, please rinse off and stop using the product.
32、If the product has abnormal high temperature or deformation during charging, please stop charging immediately and contact us for after sales service.
33、If the power cord is damaged, must replace the special cord purchased from the manufacturer of maintenance department.
34、Please take the used batteries to the recycle, or dispose of waste according to local regulations.
35、For recycling or disposal, be sure to use tape to insulate the electrode parts.
36、Disassembly of battery components is prohibited, otherwise the battery pack will break and the electrolyte will flow out and cause fire serious danger of disaster and explosion.
37、When battery leakage comes into contact with skin or clothing, be sure to rinse immediately with clean water, otherwise it will cause skin inflammation and other symptoms.
38、Do not hit or throw the battery hard, or it will leak, heat or break.

Brief Introduction of the product:

This product is intended for cooling air and/or circulating air in a room.
This product is intended for normal household use only. This product is not intended for use in commercial or industrial environments.

Technical parameters:

Model	FD-1201L
AC Adaptor Input	100-240V~50/60Hz
Input Voltage	DC5V / 9V / 12V
Power	20W (Max)
Output Voltage	DC5V 3A (Max)
Battery Capacity	12000mAh

How to fix support feet:

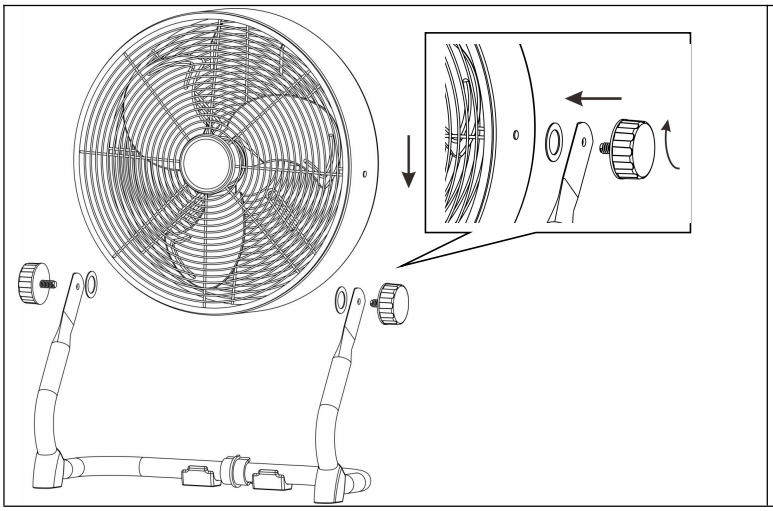

1、Take out the fan, support feet, 2 screws and 2 gaskets from the packaging.

2、Place the support feet steadily, place the fan in the middle of the support feet, put the gasket between the fan and the support feet, insert 2 screws of adjustment knobs into the fan 2 sides' screw hole, tighten clockwise, as picture.

3、Adjust the angle and tighten the knob, then can use the fan.

Parts Name:

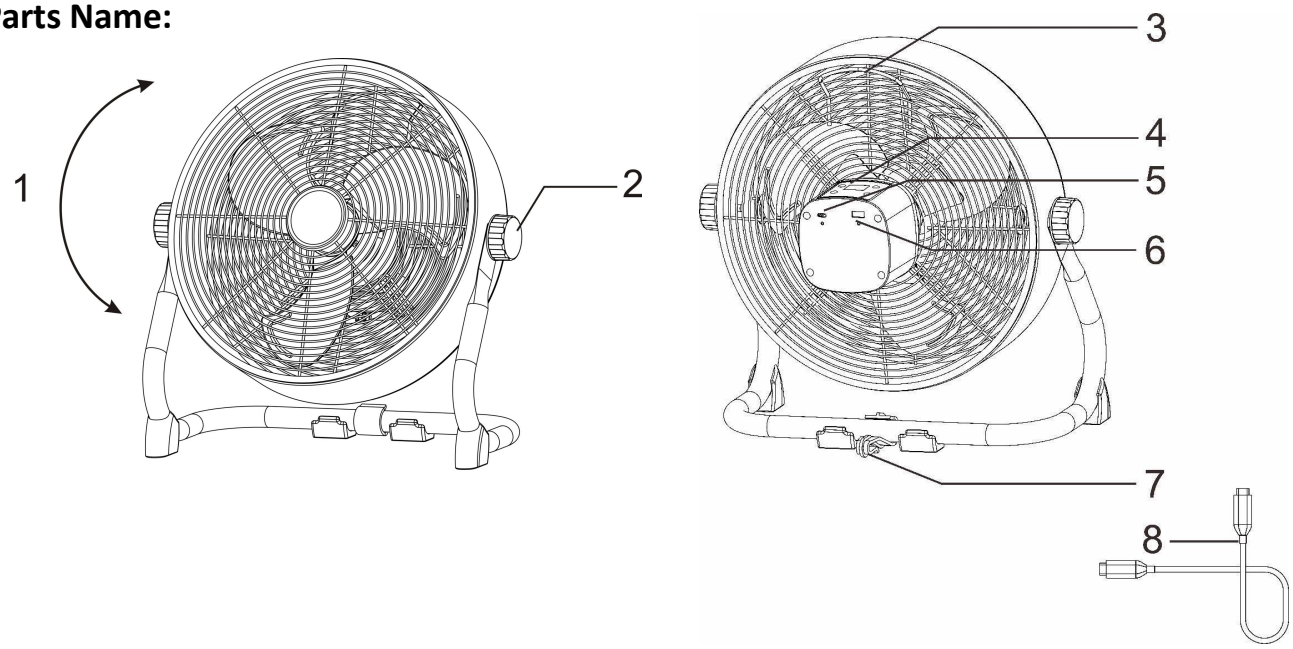

1	360° rotary adjustment	2	Rotary adjustment knob 1：2
3	Handle	4	Control panel
5	USB TYPE-C (Input)	6	USB (Output)
7	Hook	8	1.2m TYPE-C cord

How to fix the hook:

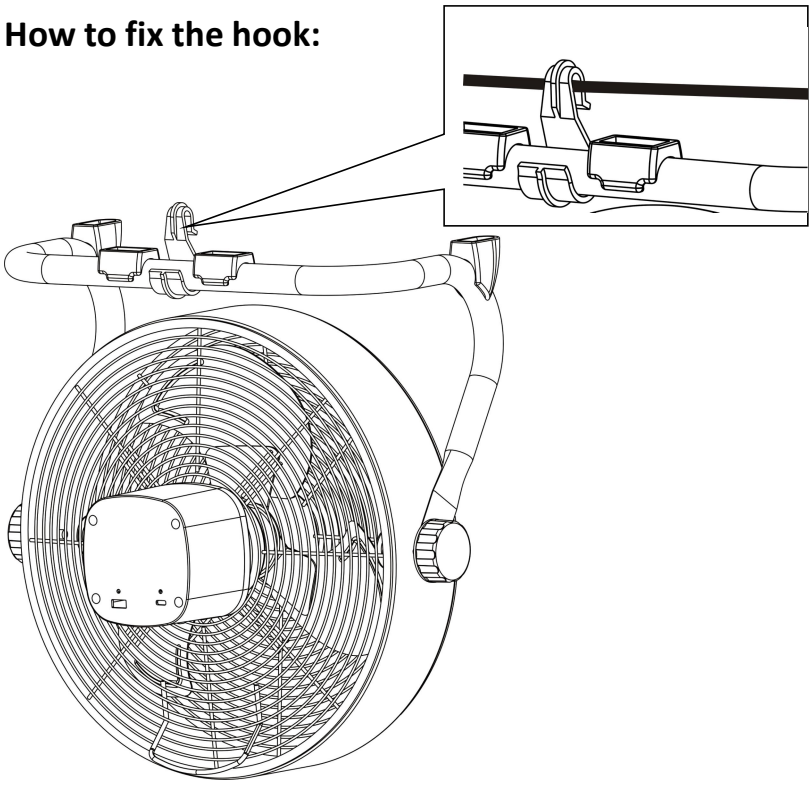

Control panel operation:

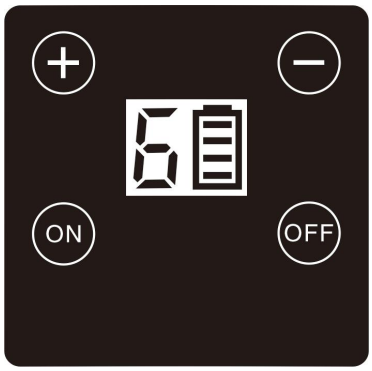

1、 Press “ON”: ON, the fan working, LED display 6(Mid-speed) and display battery level.

2、Press “OFF”: OFF.

3、Press “+” to increase the fan speed, the highest is 9.(High speed)

4、Press “-” to reduce the fan speed, the lowest is 1.(Low speed)

5、Power saving mode

5.1 When the fan speed is greater than 6 and the battery is about 10%, it automatically drops to 6 (Mid speed). At this time, the power saving mode is entered and the battery is displayed as “”, it needs to be charged.

5.2 In the power saving mode, pressing “+” can not adjust fan speed over 6. Only the battery is reached to first level, show as “ ”, then could set fan speed normally.

Cleaning and maintenance

Switch the fan off and remove the plug from the socket if you wish to clean the device or perform maintenance. The fan only needs general, exterior maintenance. Dust it regularly with a soft cloth or duster or use a vacuum cleaner with a soft brush to clean.. Ensure that water does not come into contact with anything other than the grille and blades. Never rinse or spray the fan! In order to prevent material discolouration or deformities, never use aggressive or corrosive (cleaning) products. If the fan is to be stored at the end of the season, repack in its original packaging: this offers the best protection. Store it in a safe and dry place that is not subject to extremes of heat or cold.

Correct Disposal of this product	
	This marking indicates that this product should not be disposed with other household wastes throughout the EU. To prevent possible harm to the environment or human health from uncontrolled waste disposal, recycle it responsibly to promote the sustainable reuse of material resources. To return your used device, please use the return and collection systems or contact the retailer where the product was purchased. They can take this product for environmental safe recycling.

WARRANTY:

AIR CHOICE warrants this product against defects in materials and/or workmanship under normal use for a period of ONE YEAR from the date of purchase by the original purchaser ("Warranty Period"). If a defect arises and a valid claim is received within the Warranty Period, at its option, AIR CHOICE will either 1) repair the defect at no charge, using new or refurbished replacement parts, or 2) replace the product with a new product that is at least functionally equivalent to the original product, or provide a store credit in the amount of the purchase price of the original product. A replacement product or part, including a user-installable part installed in accordance with instructions provided by AIR CHOICE, assumes the remaining warranty of the original product. When a product or part is exchanged, any replacement item becomes your property and the replaced item becomes AIR CHOICE's property. When a store credit is given, the original product must be returned to AIR CHOICE and becomes AIR CHOICE's property. To obtain warranty service, e-mail AIR CHOICE Limited Warranty Service at **airchoice@afterservice.vip**. Please be prepared to describe the product that needs service and the nature of the problem.

This warranty does not apply to:
a) damage caused by failure to follow instructions relating to product' use or the installation of components; b) damage caused by accident, abuse, misuse, fire, floods, earthquake, or other external causes; c) damage caused by service performed by anyone who is not a representative of AIR CHOICE; d) accessories used in conjunction with a covered product; e) a product or part that has been modified to alter functionality or capability; f) items intended to be periodically replaced by the purchaser during the normal life of the product including, without limitation, batteries or light bulbs; g) any product sold "as is" including, without limitation, floor demonstration models and refurbished items; or h) a product that is used commercially or for a commercial purpose.

CONTACT US:

Thank you for choosing **AIR CHOICE** product.

For any questions about your product or honor your warranty, please try the following methods to get in touch with us:

1. Scan the QR code below;

2. Write us at [**airchoice@afterservice.vip**];

3. Call us at **+1 (855) 620 5858.**

Our customer service time will respond ASAP within 24 hours!

Get 24/7 Assistance at

airchoice

Use camera or QR scanner to scan

Visit: https://airchoice.afterservice.vip
Email: airchoice@afterservice.vip
Call: +1 (855) 620 5858

Questions or Problems?

Tell us
We are here to help with our lifetime professional 100% satisfied service within 12 hrs.

airchoice@afterservice.vip