HANDRAIL KIT-RETRO FIT FOR AWR - AWR-HR-7-RF

APPROX WEIGHT: 38.35 lbs.
DOES NOT INCLUDE WEIGHT OF POWER OR PACKAGING!!!

*** ANY ADDITIONS, DELETIONS, OR OMISSIONS MUST BE CORRECTED ON THIS DRAWING AS THIS DRAWING WILL BE CONSIDERED ALL INCLUSIVE ***
ALL GRAPHICS PROVIDED ARE FOR REFERENCE ONLY. IF CERTAIN DIMENSIONS ARE CRITICAL PLEASE VERIFY THOSE DIMENSIONS WITH YOUR SALESPERSON

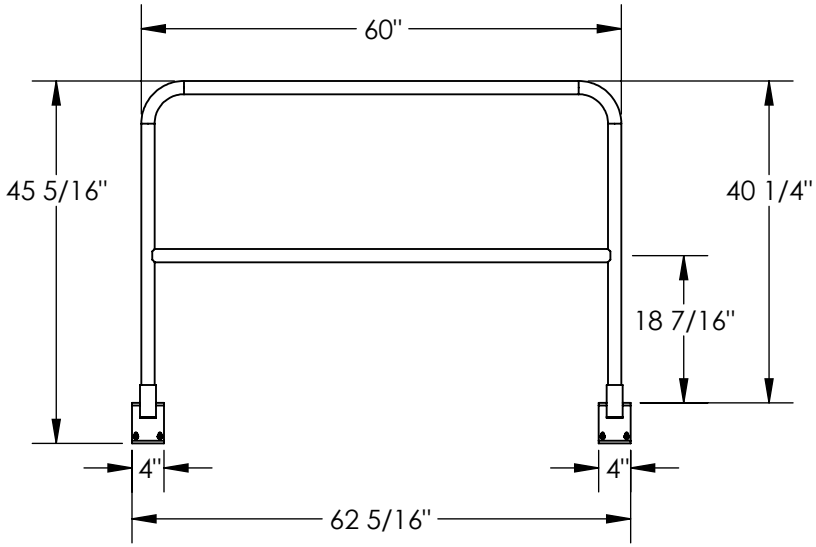

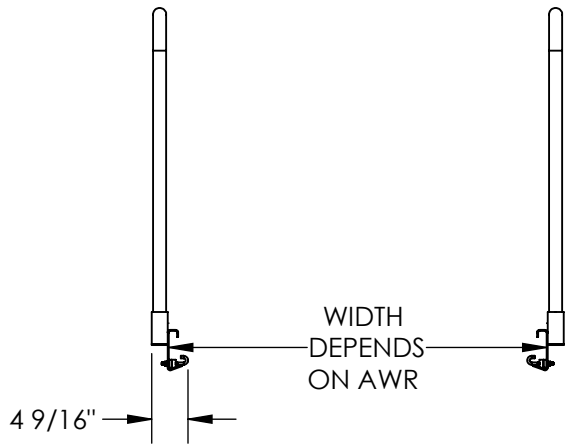

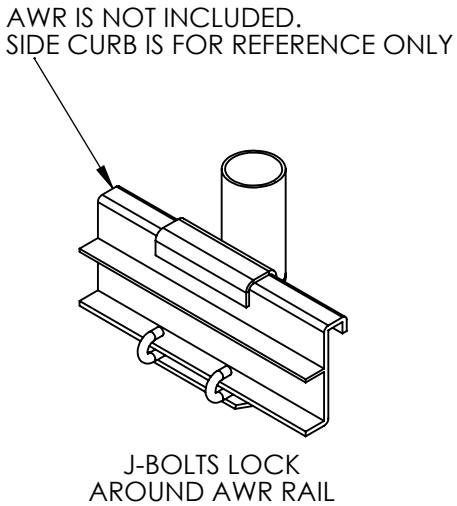

DIMENSION TOLERANCE ± 1/4"

HANDRAIL KIT IS COMPATABLE WITH THE FOLLOWING ALUMINUM WALK RAMPS	
AWR-28-7A	AWR-38-7A
AWR-28-7B	AWR-38-7B
AWR-G-28-7A	AWR-G-38-7A

STANDARD FEATURES

MODEL NUMBER IS AWR-HR-7-RF
WIDTH DEPENDS ON THE AWR
OVERALL LENGTH IS 62 5/16"
USABLE LENGTH IS 60"
OVERALL HEIGHT IS 40 1/4"
USABLE HEIGHT IS 60"
HANDRAIL KIT INCLUDES:
(2) ALUMINUM ADKR-5 HANDRAILS
(4) MOUNTING BRACKETS AND HARDWARE
MOUNTING BRACKETS ARE DURABLE BAKED IN POWDER COAT SILVER FINISH
MAX WIDTH OF INDIVIDUAL HANDRAIL INCLUDING BRACKET IS 4 9/16"

SPECIAL FEATURES

NONE

APPROVAL

I, THE UNDERSIGNED, AGREE THAT THE PRODUCT AS REPRESENTED SATISFIES DESIGN AND DIMENSION REQUIREMENTS. I ALSO ACKNOWLEDGE MY DUTY TO CONFIRM PRODUCT AND INSTALLATION COMPLIANCE WITH ALL APPLICABLE FEDERAL, STATE AND LOCAL REGULATIONS AND STANDARDS.

UNITS REQUIRING APPROVAL DRAWINGS OR MODIFIED ARE NON-RETURNABLE

[ ] As drawn [ ] As marked

Signed:_____ Date:_____

Printed Name:_____

LEAD TIME WILL START UPON RECEIPT OF SIGNED APPROVAL DRAWING

DISTRIBUTOR'S NAME: VESTIL MANUFACTURING		P.O.# X
		W.O.# X
DRAWN BY: TAW	DATE: 8/17/2016	SALES: X
REFERENCE: X	SCALE: 1:24	FILE NAME: 18-007-312
QUOTED LEAD TIME: X	QUOTE # X	