marathon®

Severe Duty Motors

Model No: 284TSTFCD6501
Catalog No: E607A

Severe Duty Motor, 25 HP, 3 Ph, 60 Hz, 460 V, 3600 RPM, 284TS Frame, TEFC

©2026 Marathon, All Rights Reserved.

marathon®

Product Information Packet: Model No: 284TSTFCD6501, Catalog No: E607A Severe Duty Motor, 25 HP, 3 Ph, 60 Hz, 460 V, 3600 RPM, 284TS Frame, TEFC

Nameplate Specifications

Phase	**3**	Output HP	**25 Hp**
Output KW	**18.7 kW**	Voltage	**460 V**
Speed	**3555 r/min**	Synchronous RPM	**3600 r/min**
Service Factor	**1.15**	Frame	**284TS**
Enclosure	**Totally Enclosed Fan Cooled**	Thermal Protection	**No Protection**
Efficiency	**91.7 %**	Ambient Temperature	**40 °C**
Frequency	**60 Hz**	Current	**30.0 A**
Power Factor	**86**	Duty	**Continuous**
Insulation Class	**H**	Design Code	**B**
KVA Code	**G**	Drive End Bearing Size	**6311**
Opp Drive End Bearing Size	**6211**	UL	**Listed**
CSA	**Y**	CE	**Y**
IP Code	**55**	Number of Speeds	**1**
Hazardous Location	**DIVISION 2 T2B**		

Technical Specifications

Electrical Type	**Squirrel Cage Inverter Rated**	Starting Method	**Line Or Inverter**
Poles	**2**	Rotation	**Reversible**
Resistance Main	**.395 O**	Mounting	**Rigid Base**
Motor Orientation	**Horizontal**	Drive End Bearing	**Ball**
Opp Drive End Bearing	**Ball**	Frame Material	**Cast Iron**
Shaft Type	**TS**	Shaft Diameter	**1.625 in**
Assembly/Box Mounting	**F1/F2 Capable**	Inverter Load	**Constant 2:1/Variable 10:1**

Drawings

Connection Drawing	**EE7300U**	Outline Drawing	**SS312943-100**

This is an uncontrolled document once printed or downloaded and is subject to change without notice. Date Created: 14/10/2026

DASH NO.	B	C	E	2E	2F	2FF	BA	BS	MOUNTING	FRAME
100	10.83	25.27	5.50	11.00	---	9.50	4.75	4.75	F1 OR F2	284TS
200	12.68	26.77			9.50	11.00		5.50		284/286TS

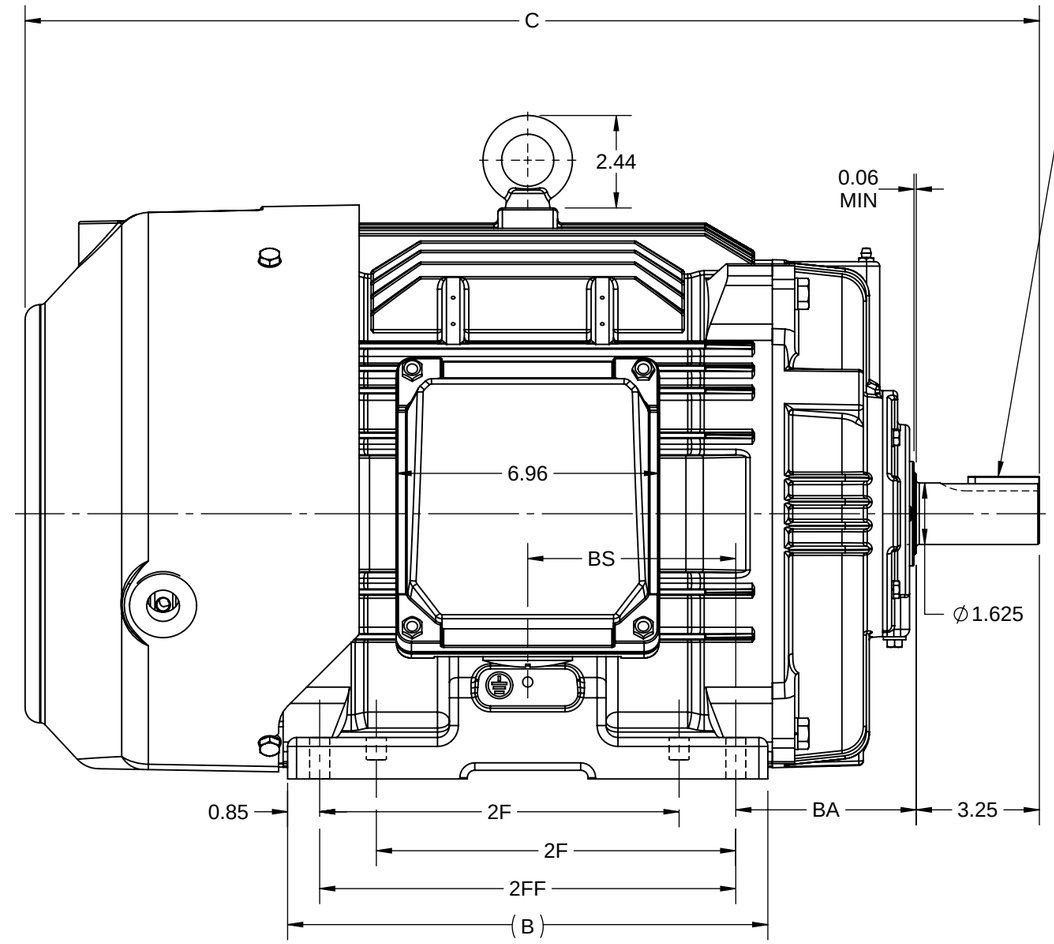

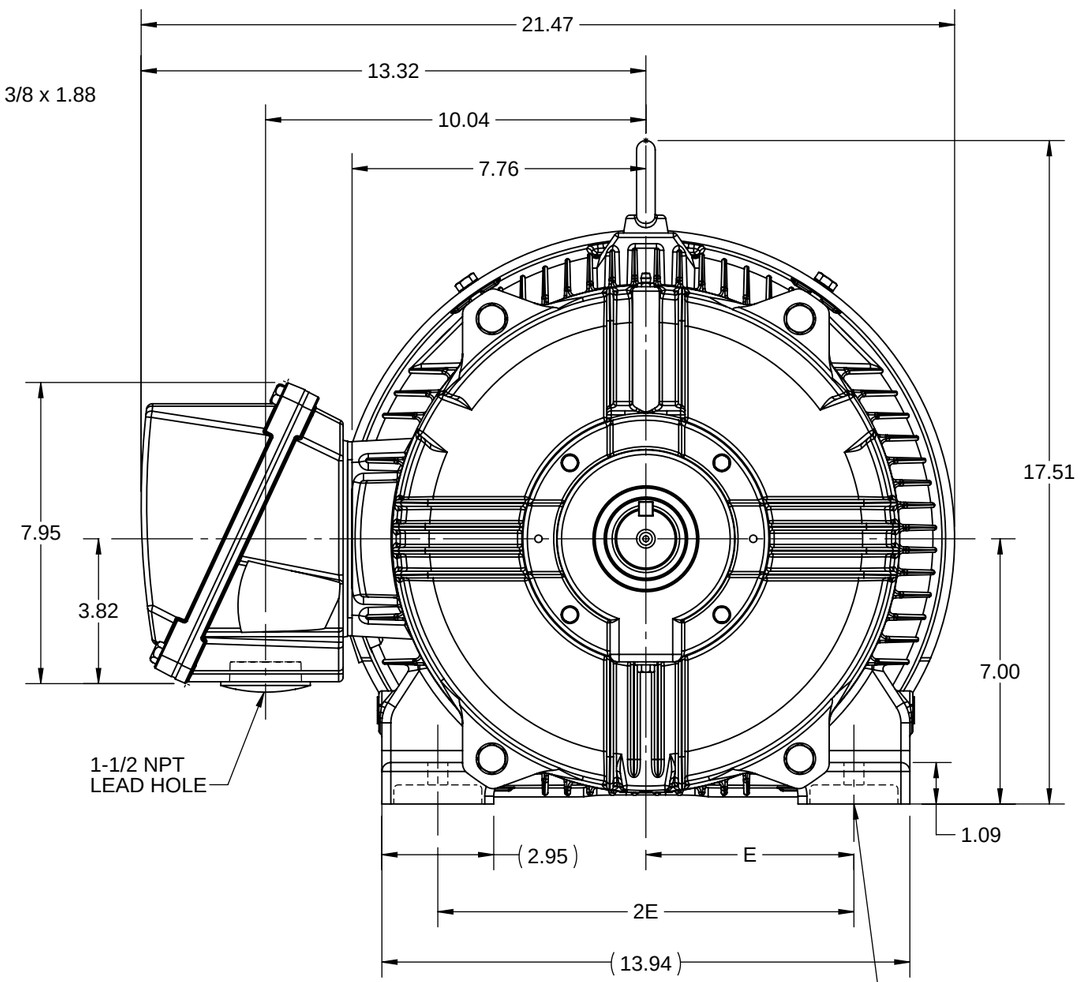

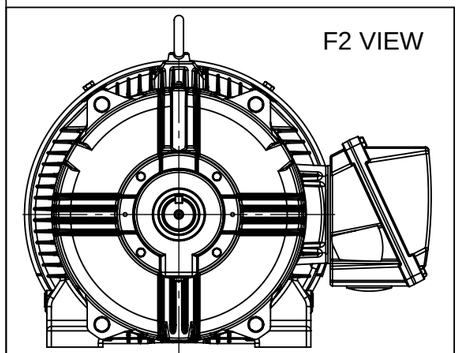

DRAWING REVISION	REVISION BY	REV DATE/© DATE
E	SB	12/19/2025
REQUEST NUMBER	APPROVED BY	DATE
CR-0024964	RMS	12/19/2025

REQUEST NUMBER DESCRIPTION
DRAWING TITLE BLOCK UPDATED

COPYRIGHT (PER REVISION DATE) MARATHON ELECTRIC, LLC. ALL RIGHTS RESERVED. PROPRIETARY AND CONFIDENTIAL INFORMATION - THIS DOCUMENT IS THE PROPERTY OF MARATHON ELECTRIC, LLC. ("OWNER") AND CONTAINS OWNER'S PROPRIETARY INFORMATION. ANY PERSON, CORPORATION OR OTHER FIRM RECEIVING IT IS DEEMED, BY RECEIVING IT, TO AGREE THAT IT, AND/OR ANY PART OF IT, SHALL NOT BE DISCLOSED TO ANY PERSON, CORPORATION OR OTHER ENTITY, DUPLICATED, AND/OR USED, EXCEPT AS EXPRESSLY APPROVED IN WRITING IN ADVANCE BY OWNER. THIS DOCUMENT SHALL BE RETURNED TO OWNER UPON REQUEST. IT MAY BE SUBJECT TO CERTAIN RESTRICTIONS UNDER APPLICABLE EXPORT CONTROL LAWS AND REGULATIONS.

PRIMARY DIMENSIONS ARE INCH
mm DIMENSIONS IN [BRACKETS]
ARE FOR REFERENCE ONLY

DRAWN BY	BISWA
DATE	24/12/2018
APPROVED BY	SBD
DATE	24/12/2018
REFERENCE	

marathon™

DESCRIPTION
OUTLINE
284/286TS FR-NEMA-SD & IEEE841

MATERIAL | PROCESS/FINISH

THIRD ANGLE PROJECTION

SIZE	DRAWING NUMBER	SHEET
B	SS312943	1 OF 1

IF MOTOR HAS 9 LEADS

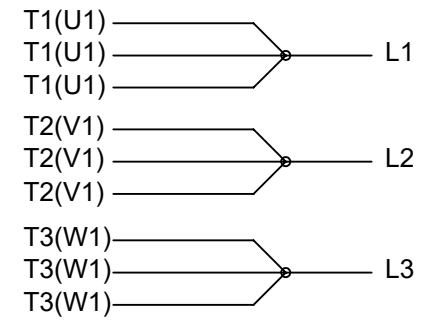

IF MOTOR HAS 6 LEADS

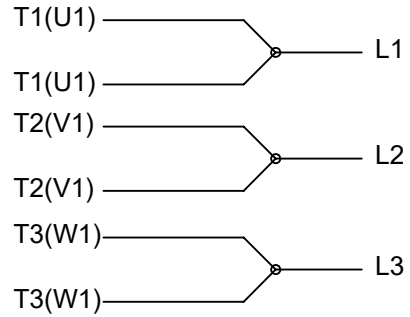

A-9806 DECAL IF CALLED FOR

IF MOTOR HAS 12 LEADS

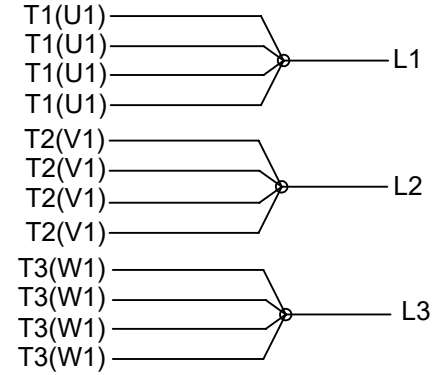

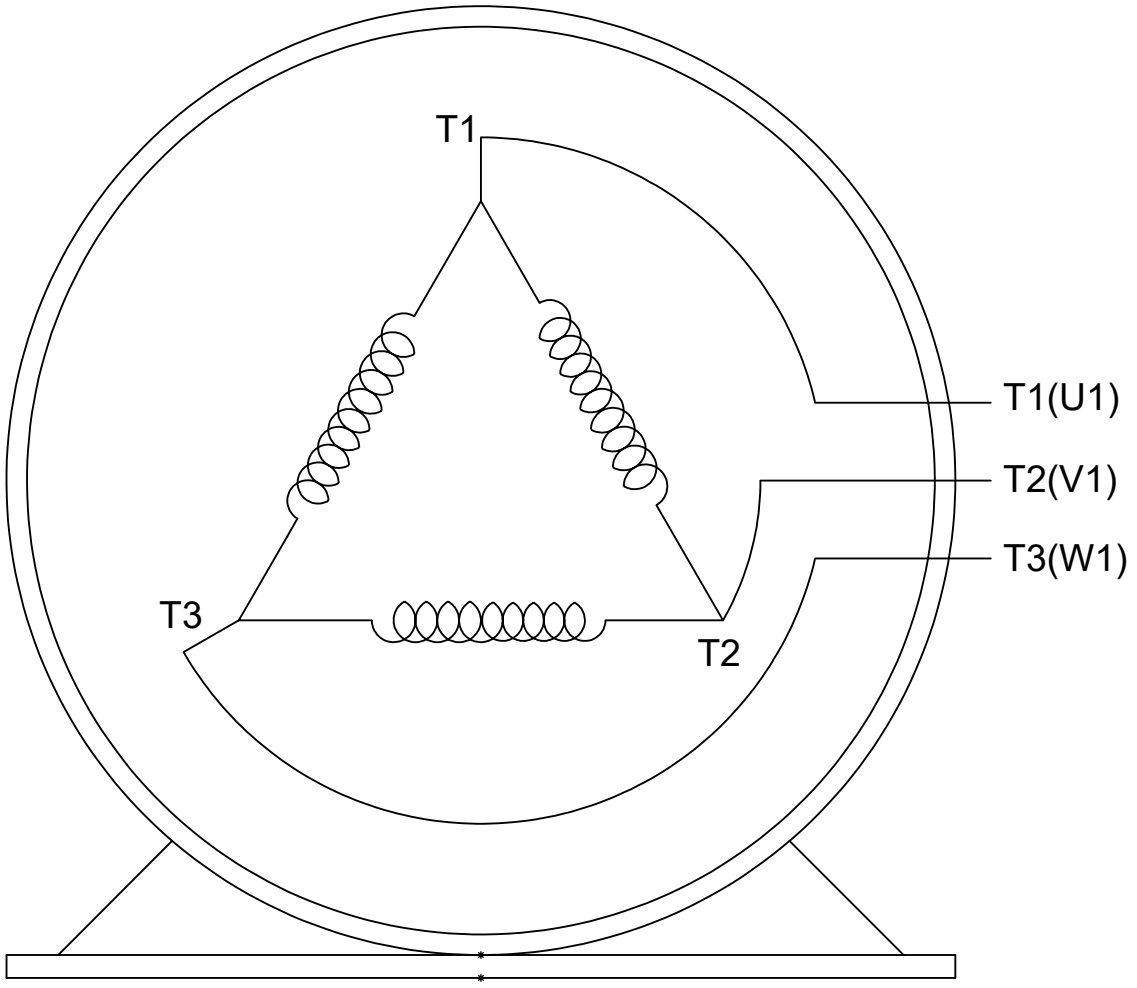

VIEW OF TERMINAL END

DRAWING REVISION	REVISION BY	REV DATE/© DATE
M	SB	08/01/2025
REQUEST NUMBER	APPROVED BY	DATE
CR-0023654	SBD	08/01/2025

REQUEST NUMBER DESCRIPTION
DRAWING TITLE BLOCK UPDATED

COPYRIGHT (PER REVISION DATE) MARATHON ELECTRIC, LLC. ALL RIGHTS RESERVED. PROPRIETARY AND CONFIDENTIAL INFORMATION - THIS DOCUMENT IS THE PROPERTY OF MARATHON ELECTRIC, LLC. ("OWNER") AND CONTAINS OWNER'S PROPRIETARY INFORMATION. ANY PERSON, CORPORATION OR OTHER FIRM RECEIVING IT IS DEEMED, BY RECEIVING IT, TO AGREE THAT IT, AND/OR ANY PART OF IT, SHALL NOT BE DISCLOSED TO ANY PERSON, CORPORATION OR OTHER ENTITY, DUPLICATED, AND/OR USED, EXCEPT AS EXPRESSLY APPROVED IN WRITING IN ADVANCE BY OWNER. THIS DOCUMENT SHALL BE RETURNED TO OWNER UPON REQUEST. IT MAY BE SUBJECT TO CERTAIN RESTRICTIONS UNDER APPLICABLE EXPORT CONTROL LAWS AND REGULATIONS.

PRIMARY DIMENSIONS ARE INCH
mm DIMENSIONS IN [BRACKETS]
ARE FOR REFERENCE ONLY

DRAWN BY	DRS
DATE	09-27-1996
APPROVED BY	GK
DATE	09-30-1996
REFERENCE	
THIRD ANGLE PROJECTION	

marathon™

DESCRIPTION
CONN DIAGRAM-EXTERNAL
3Ø SINGLE VOLTAGE

MATERIAL	PROCESS/FINISH

SIZE	DRAWING NUMBER	SHEET
A	EE7300U	1 OF 1

Data Sheet

Date: 3/10/2020
Customer:
Attention:
Submitted by: ANUSHA M

marathon® Motors

284TSTFCD6501

Submittal

Data @ 460 V

Motor Load Data

Load	0%	25%	50%	75%	100%	115%	125%	LR	
Current (Amps)	11.1	13.2	17.7	23.4	30.0	34.1	37.0	181	
Torque (ft-lb)	0.00	9.2	18.5	27.5	37.0	42.5	46.3	65.0	
RPM	3600	3588	3578	3565	3555	3,546	3540	0	
Efficiency (%)		86.5	91.0	91.7	91.7	91.4	91.0		
P.F. (%)	8.0	52.0	73.5	82.0	86.0	87.0	87.5	35.0	

Motor Speed Data

	LR	Pull-Up	BD	Rated	Idle
Speed (RPM)	0	1800	3330	3555	3600
Current (Amps)	181	166	105	30.0	11.1
Torque (ft-lb)	65.0	56.0	94.0	37.0	0.00

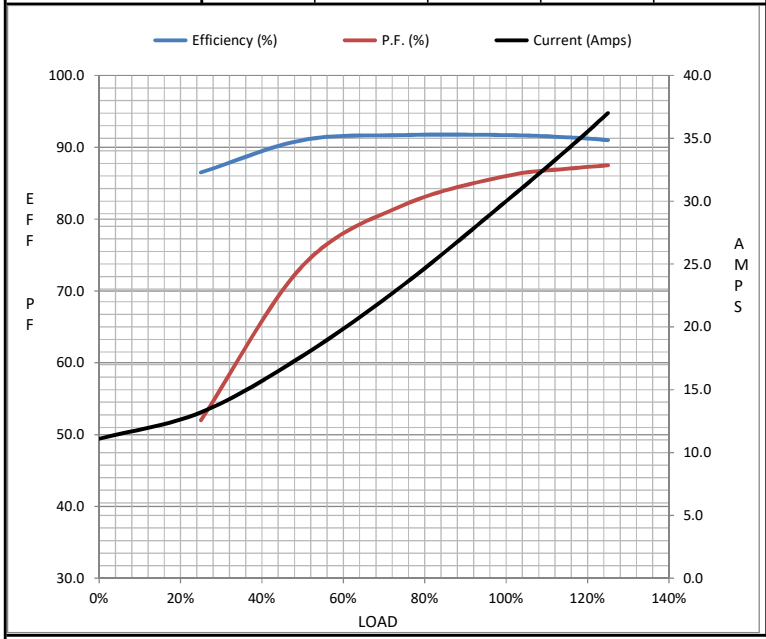

Information Block

HP	25.0
Sync. RPM	3600
Frame	284
Enclosure	TEFC
Construction	TFC
Voltage	460 V
Frequency	60 Hz
Design	B
LR Code letter	G
Service Factor	1.15
Temp Rise @ FL	55 ° C
Duty	CONT
Ambient	50 ° C
Elevation	1,000 feet
Rotor/Shaft wk²	2.90 Lb-Ft²
Ref Wdg	HE31802004 NONE
Sound Pressure @ 1M	75 dBA
VFD Rating	CONSTANT 20:1
Outline Dwg	SS312943-284TS
Conn. Diag	EE7300U
Additional Specifications:	
0	
0	

EQUIV CKT (OHMS / PHASE)

R1	R2	X1	X2	Xm
0.2610	0.1130	0.8260	0.8640	24.3810

Speed -Torque Curve

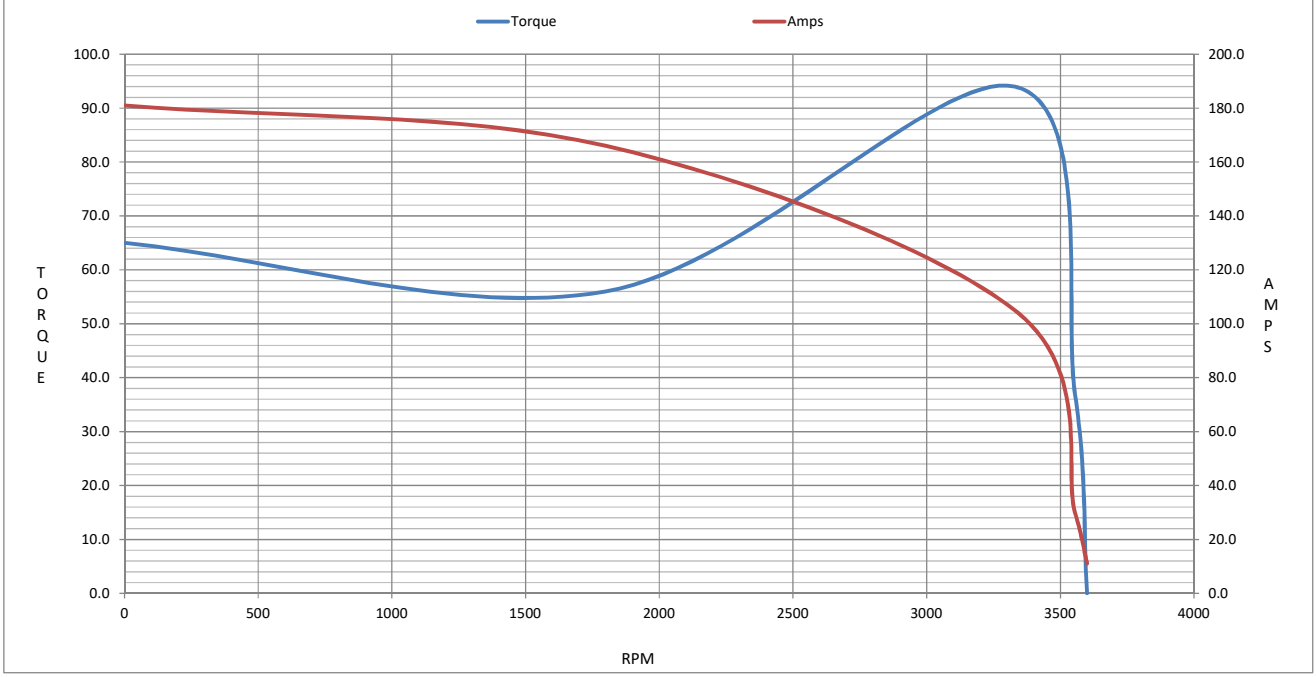

Uncontrolled Copy

marathon® Motors

DATA VOLTS: 460

CERTIFICATION DATA SHEET

MODEL #: 284TSTFCD6501
CAT #: E607A

CONN. DIAGRAM: EE7300U
OUTLINE: SS312943-284TS
WINDING: HE31802004 NONE 1

MOUNTING: F1/F2 CAPABLE

TYPICAL MOTOR PERFORMANCE DATA

HP	KW	SYNC RPM	FL RPM	FRAME	ENCLOSURE	TYPE	KVA CODE	DESIGN
25	18.7	3600	3555	284TS	TEFC	TFC	G	B

PH	HZ	VOLTS	AMPS	START TYPE	DUTY	INSL	S.F.	AMB (° C)	ELEV.(Ft)
3	60	460	30	LINE OR INVERTER	CONT	H	1.15	40	3300

F.L. EFF	91.7	3/4 LD EFF	91.7	1/2 LD EFF	91.0	GTD EFF	ELECT. TYPE	
F.L. PF	86.0	3/4 LD PF	82.0	1/2 LD PF	73.5	91.0	SQ CAGE INV RATED	

F.L. TORQUE	LR AMPS @ 460 V	L.R. TORQUE	B.D. TORQUE	F.L. RISE (° C)	
37.0 LB-FT	181	65.0 LB-FT 176%	94.0 LB-FT 254%	55	

SOUND PRESSURE @	SOUND	ROTOR WK²	MAX. LOAD WK²	SAFE STALL TIME	STARTS/HOUR	APROX. MOTOR
75 dBA	84 dBA	2.90 LB-FT²	32 LB-FT²	20 SEC.	2	440 LB.

*** SUPPLEMENTAL INFORMATION ***

DE BRACKET TYPE	ODE BRACKET TYPE	MOUNT TYPE	MOTOR ORIENTATION	SEVERE DUTY	HAZARDOUS LOCATION	DRIP COVER	SCREENS	PAINT
STANDARD	STANDARD	RIGID	HORIZONTAL	PREMIUM SEVERE DUTY	DIVISION 2 T2B	NO	NONE	BLUE (EPOXY)

BEARINGS DE	BEARINGS ODE	GREASE	SHAFT TYPE	SPECIAL DE	SPECIAL ODE	SHAFT MATERIAL	FRAME MATERIAL
BALL 6311	BALL 6211	POLYREX EM	TS	NONE	NONE	1045 HOT ROLLED (C-204)	CAST IRON

THERMOSTATS	PROTECTORS	WDG RTD's	BRG RTD's	THERMISTORS	CONTROL	SPACE HEATERS
NONE	NOT	NONE	NONE	NONE	FALSE	NA

R1 (ohms/ph)	R2 (ohms/ph)	X1 (ohms/ph)	X2 (ohms/ph)	Xm (ohms/ph)	VIBRATION (in/sec)	
0.261	0.113	0.826	0.864	24.381	0.080	

If Inverter equals NONE, contact factory for further information

*
NOTES
*

INVERTER TORQUE: CONSTANT 20:1
INV. HP SPEED RANGE: NONE

ENCODER: NONE
NONE
NONE NONE **PPR**

BRAKE: NONE
NONE NONE
FT-LB: NA
VOLTAGE: NONE **HZ:**

PREPARED BY: ANUSHA M
DATE: 3/10/2020

FORM: 3531 REV_4 2/27/06
** Subject to change without notice.