ABB BALDOR RELIANCE

Customer information packet

L3504

.5HP, 1725RPM, 1PH, 60HZ, 56, 3421L, TEFC, F1
Class - None
Division - Not Applicable

Copyright © All product information within this document is subject to ABB Motors and Mechanical Inc. copyright © protection, unless otherwise noted.
11/5/2026 1:09:12 PM

Specifications

Enclosure	TEFC
Frame	56
Frame Material	Steel
Frequency	60.00 Hz
Haz Area Class and Group	None
Haz Area Division	Not Applicable
Motor Letter Type	Cap Start, Induction Run
Output @ Frequency	.500 HP @ 60 HZ
Phase	1
Synchronous Speed @ Frequency	1800 RPM @ 60 HZ
Voltage @ Frequency	230.0 V @ 60 HZ
	115.0 V @ 60 HZ
Agency Approvals	C UR US
Ambient Temperature	40 °C
Auxiliary Box	NO AUXILLARY BOX
Auxiliary Box Lead Termination	None
Base Indicator	Rigid
Bearing Grease Type	Polyrex EM (-20F +300F)
Blower	None
Current @ Voltage	7.400 A @ 115.0 V
	4.300 A @ 208.0 V
	3.700 A @ 230.0 V
Design Code	N
Drip Cover	No Drip Cover
Duty Rating	CONT
Efficiency @ 100% Load	68.0 %
Electrically Isolated Bearing	Not Electrically Isolated
Feedback Device	NO FEEDBACK
Front Face Code	Standard
Front Shaft Indicator	None
Heater Indicator	No Heater
High Voltage Full Load Amps	3.7 a

Part Detail

Revision	AU
Type	AC
Mech. spec.	34C061
Base	
Status	PRD/A
Elec. spec.	34WG5422
Layout	34LYC061
Eff. date	12-30-2024
CD Diagram	CD0001
Poles	04
Leads	6#18
Proprietary	False
Created date	01-01-0001

Insulation Class	B
Inverter Code	Not Inverter
IP Rating	NONE
KVA Code	J
Lifting Lugs	No Lifting Lugs
Locked Bearing Indicator	No Locked Bearing
Motor Lead Exit	Ko Box
Motor Lead Quantity/Wire Size	6 @ 18 AWG
Motor Lead Termination	Flying Leads
Motor Standards	NEMA
Motor Type	3421L
Mounting Arrangement	F1
Number of Poles	4
Overall Length	11.97 IN
Power Factor	66
Product Family	General Purpose
Pulley End Bearing Type	Ball
Pulley Face Code	Standard
Pulley Shaft Indicator	Standard
Rodent Screen	None
RoHS Status	ROHS COMPLIANT
Service Factor	1.25
Shaft Diameter	0.625 IN
Shaft Extension Location	Pulley End
Shaft Ground Indicator	No Shaft Grounding
Shaft Rotation	Reversible
Shaft Slinger Indicator	No Slinger
Speed	1725 rpm
Speed Code	Single Speed
Starting Method	Direct on line
Thermal Device - Bearing	None
Thermal Device - Winding	None
Vibration Sensor Indicator	No Vibration Sensor
Winding Thermal 1	None

Winding Thermal 2	None

Nameplate

NP1256L									
CAT.NO.	L3504								
SPEC.	34C61-5422								
HP	.5								
VOLTS	115/230								
AMP	7.4/3.7								
RPM	1725								
FRAME	56	**HZ**	60			**PH**	1		
SER.F.	1.25	**CODE**	J	**DES**	N	**CLASS**	B		
NEMA-NOM-EFF	68	**PF**	66						
RATING	40C AMB-CONT								
CC									
DE	6203	**ODE**	6203						
ENCL	TEFC	**SN**							
	SFA 8.2/4.1								

Accessories

Part number	Description	Multiplier
34-171	C FACE KIT	A8

AC Induction Motor Performance Data
Record # 6767
Typical performance - not guaranteed values

Winding: 34WG5422-R001	**Type:** 3421L	**Enclosure:** TEFC

Nameplate Data				**230 V, 60 Hz: High Voltage Connection**	
Rated Output (HP)			.5	**Full Load Torque**	1.5 LB-FT
Volts			115/230	**Start Configuration**	direct on line
Full Load Amps			7.4/3.7	**Breakdown Torque**	4.13 LB-FT
R.P.M.			1725	**Pull-up Torque**	3.6 LB-FT
Hz	60	**Phase**	1	**Locked-rotor Torque**	4.65 LB-FT
NEMA Design Code	N	**KVA Code**	J	**Starting Current**	16.5 A
Service Factor (S.F.)			1.25	**No-load Current**	2.8 A
NEMA Nom. Eff.	68	**Power Factor**	66	**Line-line Res. @ 25ºC**	4.44 Ω A Ph 3.19 Ω B Ph
Rating - Duty			40C AMB-CONT	**Temp. Rise @ Rated Load**	63°C
S.F. Amps			8.2/4.1	**Temp. Rise @ S.F. Load**	77°C

Load Characteristics 230 V, 60 Hz, 0.5 HP

% of Rated Load	**25**	**50**	**75**	**100**	**125**	**150**	**S.F.**
Power Factor	32	46	59	66	72	80	72
Efficiency	42	58	65	68	69	68	69
Speed	1783	1765	1750	1730	1710	1680	1710
Line amperes	2.8	3	3.3	3.7	4.1	4.8	4.1

ABB Motors and Mechanical Inc.

WINDING # 34WG5422

0.5 HP 1 PH 60 HZ 1725 RPM 230 V 3421L

Typical performance - not guaranteed values.

TORQUES(LB-FT): PO=4.13 PU=3.6 LR=4.65 LRA=16.5

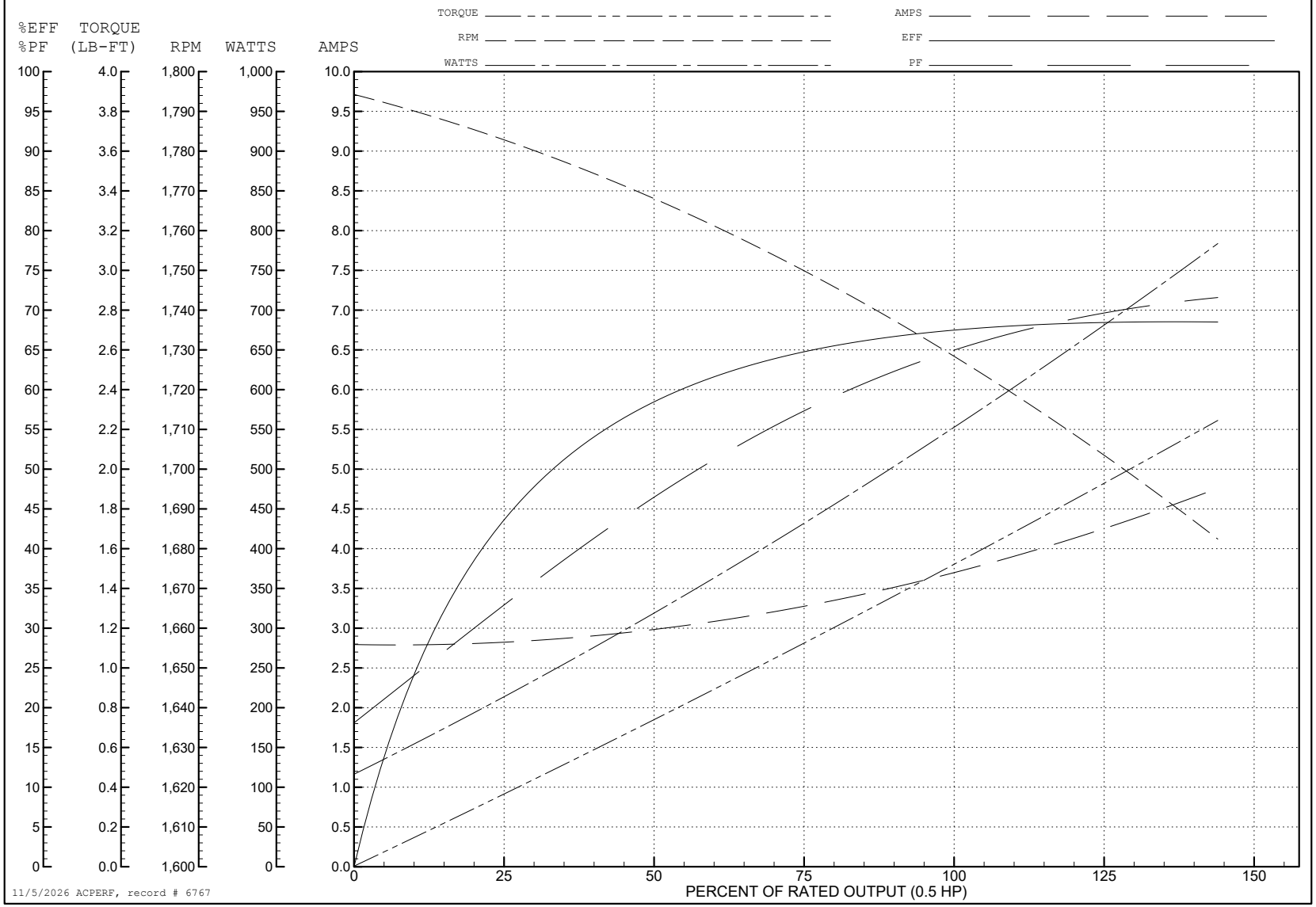

34LYC061

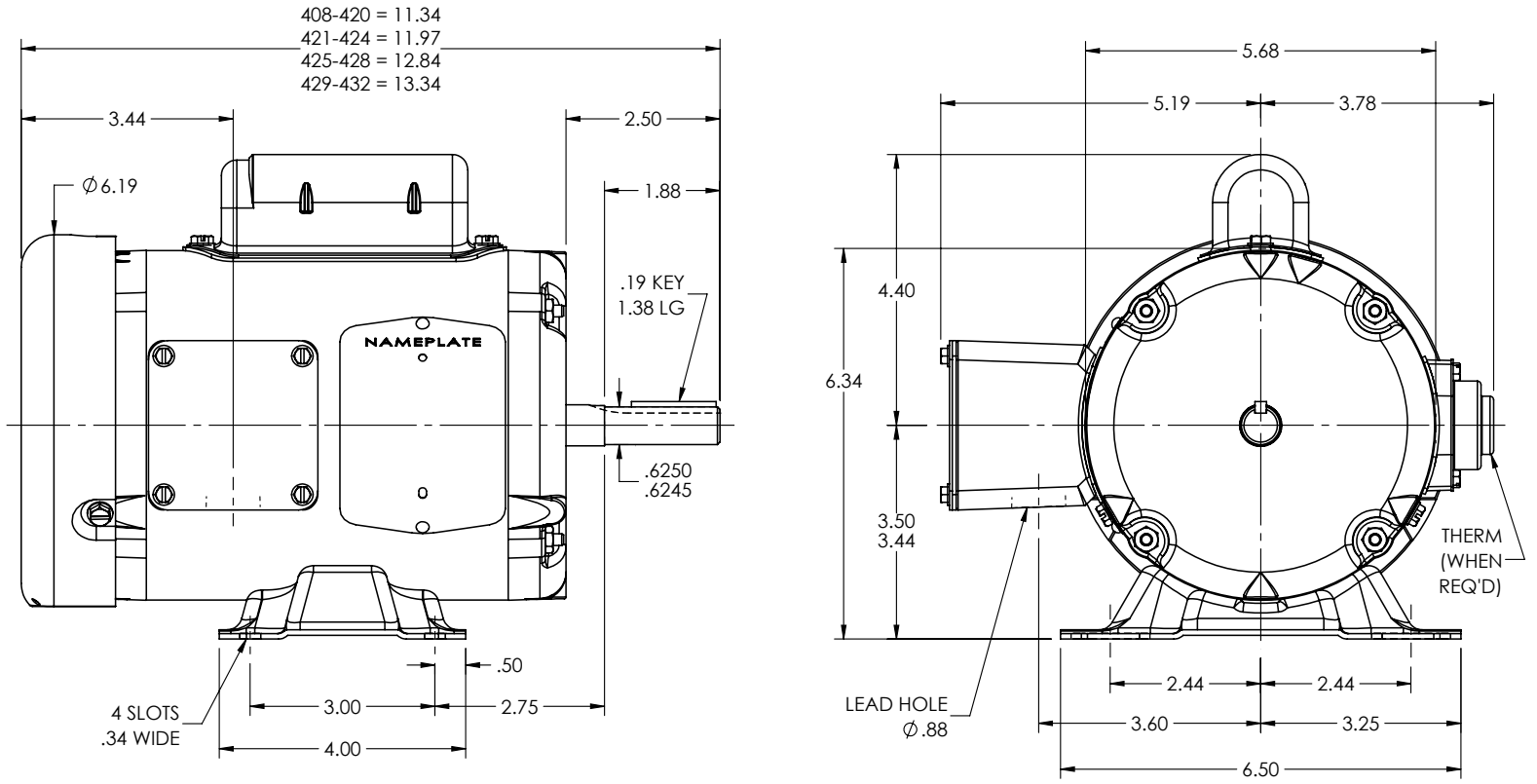

34LYC061

CUSTOMER IS RESPONSIBLE FOR DETERMINING THAT THE PRODUCT WILL PERFORM SUITABLY IN THE INTENDED APPLICATION

REV. DESC: CLEAN UP DIMENSIONING			
REV: J	VERSION: 04	REVISED: 04:06:14 04/11/2025	TDR: 000001253803
34LYC061	MODEL NO. 34LYC061		REF: -
	BY: ENJEFD0		

BALDOR - RELIANCE®

STD HORZ MODEL 34L NEMA 56 TEFC

CD0001

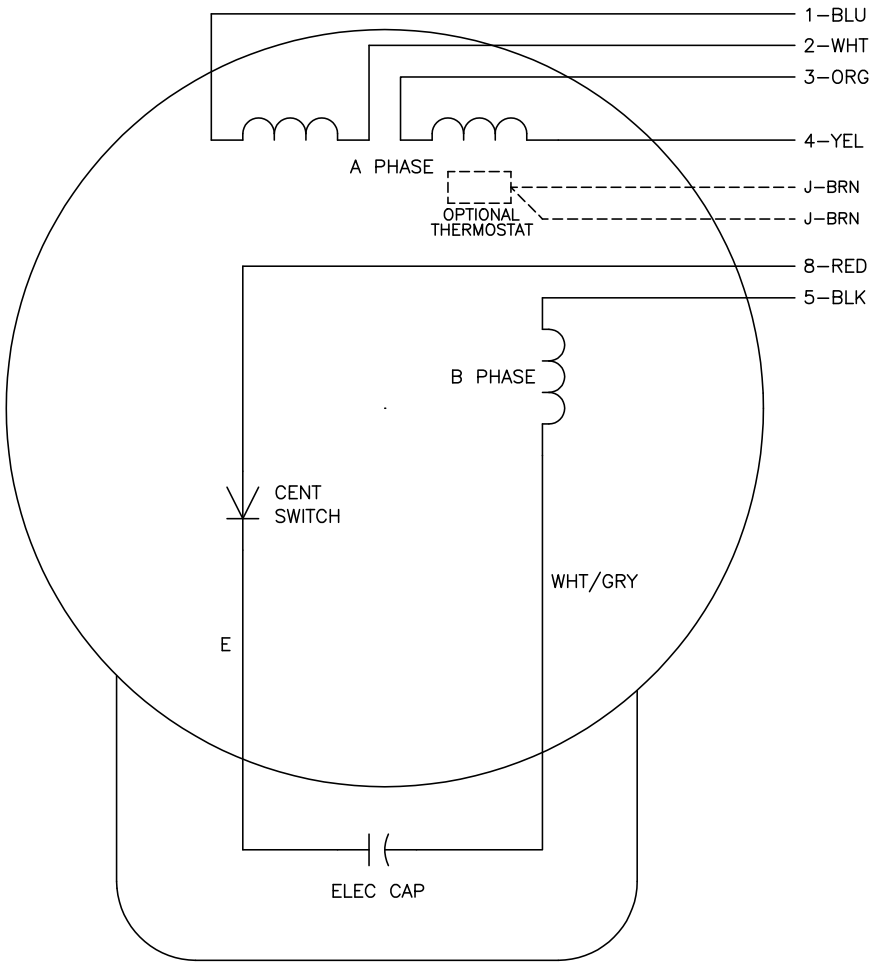

	LINE A	LINE B	JOIN
HIGH STD	1	4,5	2,3,8
HIGH OPP	1	4,8	2,3,5
LOW STD	1,3,8	2,4,5	–
LOW OPP	1,3,5	2,4,8	–

NOTES:

1. STANDARD ROTATION IS CCW FACING END OPPOSITE SHAFT EXTENSION.
2. OPTIONAL THERMOSTAT IS PROVIDED WHEN SPECIFIED.
3. MULTIPLE CAPACITORS ARE CONNECTED IN PARALLEL UNLESS OTHERWISE SPECIFIED.
4. LEAD COLORS ARE OPTIONAL. LEADS MUST ALWAYS BE NUMBERED AS SHOWN.

CD0001

REV. DESC: REVISE TO SHOW OPTIONAL COLORS			BALDOR ELECTRIC Co.
REV. LTR: D	BY: JLP	REVISED: 04/08/99 1:16	TDR: 0178636
CD0001		FILE: AAA00007405	MDL: –
		MTL: –	TYPE L, DV, REV, 6 LEADS

CD0001