ABB BALDOR RELIANCE

Customer information packet

VL3514T

1.5HP, 1725RPM, 1PH, 60HZ, 145TC, 3532LC, TEFC
Class - None
Division - Not Applicable

Copyright © All product information within this document is subject to ABB Motors and Mechanical Inc. copyright © protection, unless otherwise noted.
11/5/2026 5:11:48 PM

Specifications

Enclosure	TEFC
Frame	145TC
Frame Material	Steel
Frequency	60.00 Hz
Haz Area Class and Group	None
Haz Area Division	Not Applicable
Motor Letter Type	Cap Start, Cap Run
Output @ Frequency	1.500 HP @ 60 HZ
Phase	1
Synchronous Speed @ Frequency	1800 RPM @ 60 HZ
Voltage @ Frequency	115.0 V @ 60 HZ
	230.0 V @ 60 HZ
Agency Approvals	C UR US
Ambient Temperature	40 °C
Auxiliary Box	NO AUXILLARY BOX
Auxiliary Box Lead Termination	None
Base Indicator	No Mounting
Bearing Grease Type	Polyrex EM (-20F +300F)
Blower	None
Current @ Voltage	12.200 A @ 115.0 V
	6.100 A @ 230.0 V
Design Code	L
Drip Cover	No Drip Cover
Duty Rating	CONT
Efficiency @ 100% Load	80.0 %
Electrically Isolated Bearing	Not Electrically Isolated
Feedback Device	NO FEEDBACK
Front Shaft Indicator	None
Heater Indicator	No Heater
High Voltage Full Load Amps	6.1 a
Insulation Class	F
Inverter Code	Not Inverter

Part Detail

Revision	M
Type	AC
Mech. spec.	35EE006
Base	
Status	PRD/A
Elec. spec.	35WGG242
Layout	35LYEE006
Eff. date	05-20-2025
CD Diagram	CD0055
Poles	04
Leads	6#18
Proprietary	False
Created date	08-01-2022

KVA Code	H
Lifting Lugs	No Lifting Lugs
Locked Bearing Indicator	Locked Bearing
Motor Lead Quantity/Wire Size	6 @ 18 AWG
Motor Lead Termination	Flying Leads
Motor Standards	NEMA
Motor Type	3532LC
Mounting Arrangement	F1
Number of Poles	4
Overall Length	14.17 IN
Power Factor	98
Product Family	General Purpose
Pulley End Bearing Type	Ball
Pulley Face Code	C-Face
Pulley Shaft Indicator	Standard
Rodent Screen	None
Service Factor	1.15
Shaft Diameter	0.875 IN
Shaft Ground Indicator	No Shaft Grounding
Shaft Rotation	Reversible
Shaft Slinger Indicator	No Slinger
Speed	1725 rpm
Speed Code	Single Speed
Starting Method	Direct on line
Thermal Device - Bearing	None
Thermal Device - Winding	None
Vibration Sensor Indicator	No Vibration Sensor
Winding Thermal 1	None
Winding Thermal 2	None

Nameplate

NP1256L									
CAT.NO.	VL3514T								
SPEC.	35EE006G242								
HP	1.5								
VOLTS	115/230								
AMP	12.2/6.1								
RPM	1725								
FRAME	145TC	**HZ**	60			**PH**	1		
SER.F.	1.15	**CODE**	H	**DES**	L	**CLASS**	F		
NEMA-NOM-EFF	80	**PF**	98						
RATING	40C AMB-CONT								
CC									
DE	6205	**ODE**	6203						
ENCL	TEFC	**SN**							

AC Induction Motor Performance Data
Record # 105134
Typical performance - not guaranteed values

Winding: 35WGG242-R001	**Type:** 3532LC	**Enclosure:** TEFC

Nameplate Data				**115 V, 60 Hz: Low Voltage Connection**	
Rated Output (HP)			1.5	**Full Load Torque**	4.57 LB-FT
Volts			115/230	**Start Configuration**	direct on line
Full Load Amps			12.2/6.1	**Breakdown Torque**	9.9 LB-FT
R.P.M.			1725	**Pull-up Torque**	8.1 LB-FT
Hz	60	**Phase**	1	**Locked-rotor Torque**	13 LB-FT
NEMA Design Code	L	**KVA Code**	H	**Starting Current**	88 A
Service Factor (S.F.)			1.15	**No-load Current**	1.68 A
NEMA Nom. Eff.	80	**Power Factor**	98	**Line-line Res. @ 25ºC**	0.517 Ω A Ph 1.32 Ω B Ph
Rating - Duty			40C AMB-CONT	**Temp. Rise @ Rated Load**	61°C
S.F. Amps				**Temp. Rise @ S.F. Load**	76°C
				Locked-rotor Power Factor	91.9
				Rotor inertia	0.232 lb-ft²

Load Characteristics 115 V, 60 Hz, 1.5 HP

% of Rated Load	**25**	**50**	**75**	**100**	**125**	**150**	**S.F.**
Power Factor	94	98	98	98	97	96	97
Efficiency	71.4	82.4	84	82.2	77.7	70.5	79.5
Speed	1782	1765	1746	1723	1690	1642	1703
Line amperes	3.54	6.02	8.84	12.06	16.08	21.4	14.5

ABB Motors and Mechanical Inc.

WINDING # 35WGG242

1.5 HP 1 PH 60 HZ 1725 RPM 115 V 3532LC

Typical performance - not guaranteed values.

TORQUES(LB-FT): PO=9.9 PU=8.1 LR=13 LRA=88

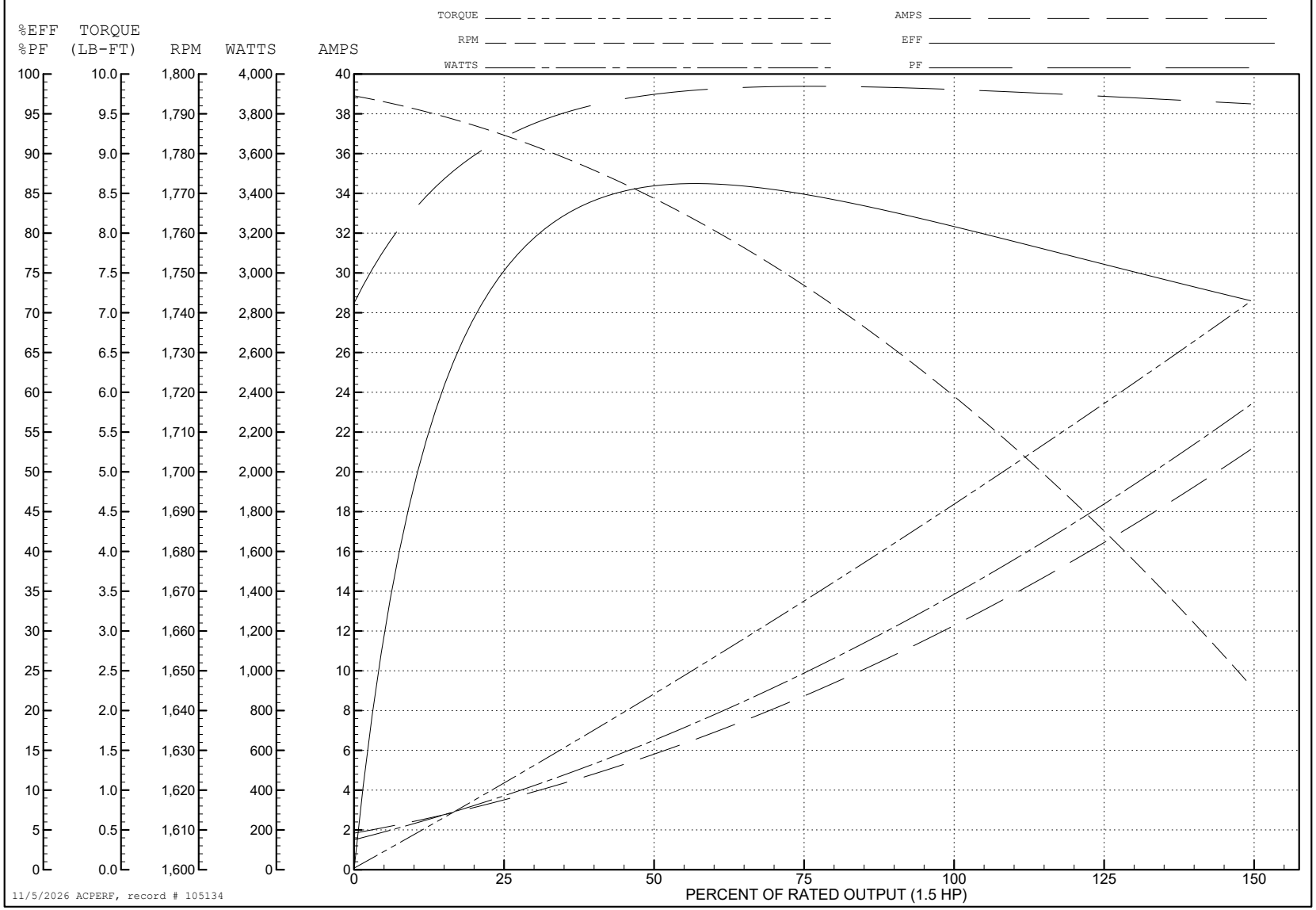

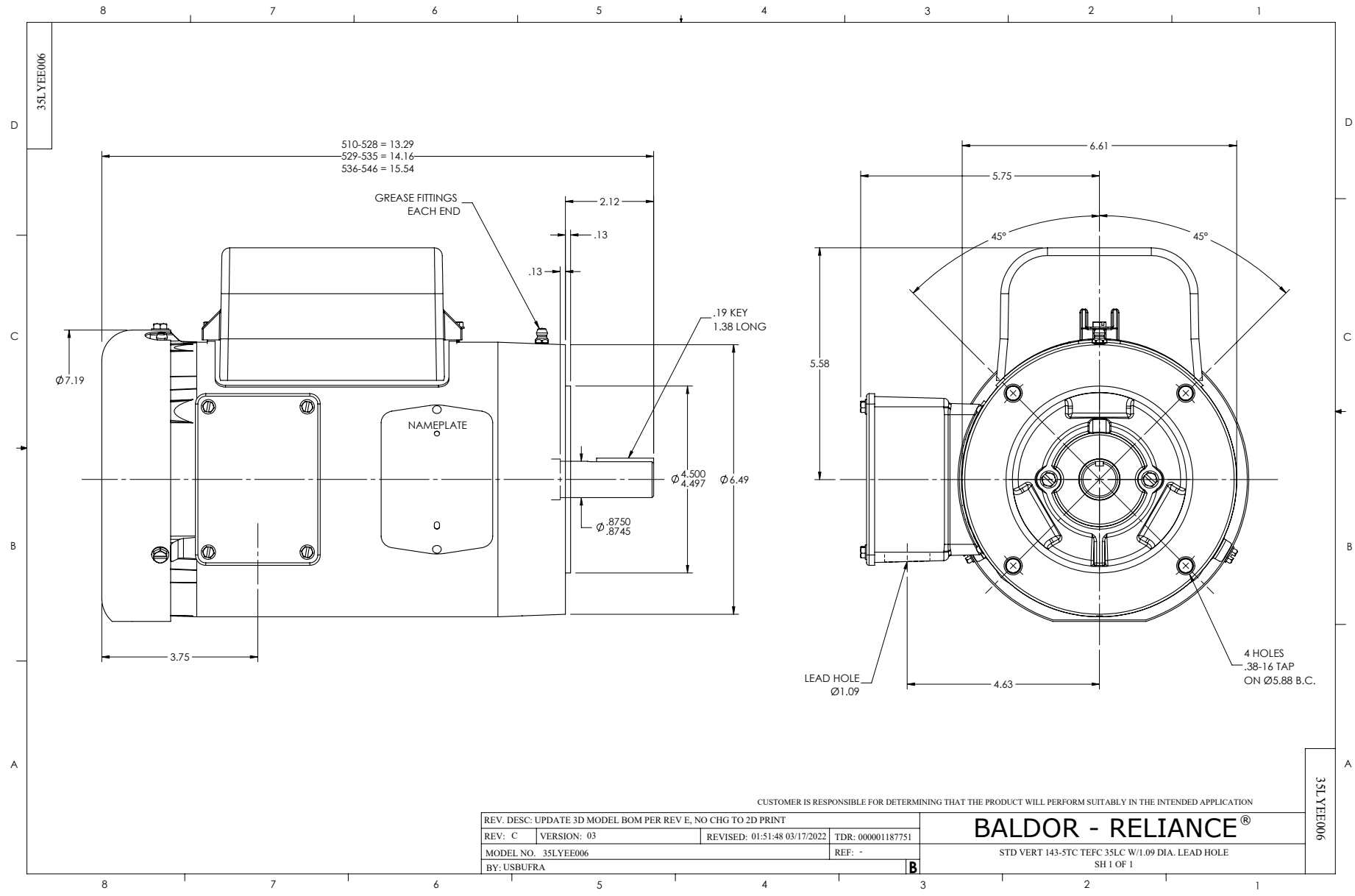
35LYEE006
510-528 = 13.29
529-535 = 14.16
536-546 = 15.54
GREASE FITTINGS
EACH END
2.12
.13
.13
.19 KEY
1.38 LONG
Ø7.19
NAMEPLATE
Ø 4.500
4.497
Ø6.49
Ø .8750
.8745
3.75
6.61
5.75
45°
45°
5.58
LEAD HOLE
Ø1.09
4.63
4 HOLES
.38-16 TAP
ON Ø5.88 B.C.
CUSTOMER IS RESPONSIBLE FOR DETERMINING THAT THE PRODUCT WILL PERFORM SUITABLY IN THE INTENDED APPLICATION
REV. DESC: UPDATE 3D MODEL BOM PER REV E, NO CHG TO 2D PRINT
REV: C
VERSION: 03
REVISED: 01:51:48 03/17/2022
TDR: 000001187751
MODEL NO. 35LYEE006
REF: -
BY: USBUFRA
B
BALDOR - RELIANCE®
STD VERT 143-5TC TEFC 35LC W/1.09 DIA. LEAD HOLE
SH 1 OF 1
35LYEE006

CD0055

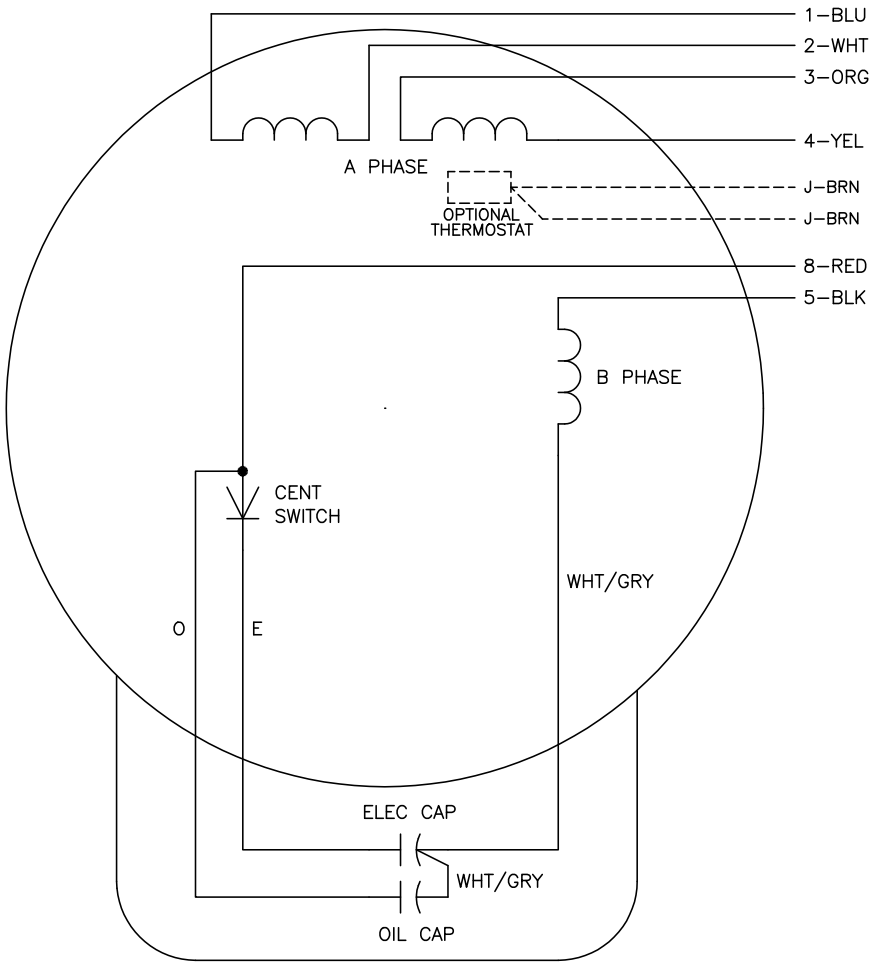

	LINE A	LINE B	JOIN
HIGH STD	1	4,5	2,3,8
HIGH OPP	1	4,8	2,3,5
LOW STD	1,3,8	2,4,5	–
LOW OPP	1,3,5	2,4,8	–

NOTES:

1. STANDARD ROTATION IS CCW FACING END OPPOSITE SHAFT EXTENSION.
2. OPTIONAL THERMOSTAT IS PROVIDED WHEN SPECIFIED.
3. MULTIPLE CAPACITORS ARE CONNECTED IN PARALLEL UNLESS OTHERWISE SPECIFIED.
4. LEAD COLORS ARE OPTIONAL. LEADS MUST ALWAYS BE NUMBERED AS SHOWN.

CD0055

REV. DESC: REVISE TO SHOW OPTIONAL COLORS			BALDOR ELECTRIC Co.
REV. LTR: D	BY: JLP	REVISED: 04/08/99 1:17	TDR: 0178636
CD0055		FILE: AAA00007414	MDL: –
		MTL: –	TYPE LC, DV, REV, 6 LEADS