ABB BALDOR RELIANCE

Customer information packet

XT31252TS

125HP, 3570RPM, 3PH, 60HZ, 444TS, A4468M, TEFC
Class - CLI GP A,B,C,D
Division - Division II

Copyright © All product information within this document is subject to ABB Motors and Mechanical Inc. copyright © protection, unless otherwise noted.
11/5/2026 12:25:35 PM

Specifications

Enclosure	TEFC
Frame	444TS
Frame Material	Iron
Frequency	60.00 Hz
Haz Area Class and Group	CLI GP A,B,C,D
Haz Area Division	Division II
Motor Letter Type	Three Phase
Output @ Frequency	125.000 HP @ 60 HZ
Phase	3
Synchronous Speed @ Frequency	3600 RPM @ 60 HZ
Voltage @ Frequency	230.0 V @ 60 HZ
	460.0 V @ 60 HZ
Agency Approvals	NEMA PREMIUM
	NEMA_PREMIUM
	UR
	CCSAUSEEV
Ambient Temperature	40 °C
Auxiliary Box	NO AUXILLARY BOX
Base Indicator	Rigid
Bearing Grease Type	Polyrex EM (-20F +300F)
Current @ Voltage	138.000 A @ 460.0 V
	276.000 A @ 230.0 V
	303.000 A @ 208.0 V
Design Code	B
Drip Cover	No Drip Cover
Duty Rating	CONT
Efficiency @ 100% Load	95.0 %
Feedback Device	NO FEEDBACK
Heater Indicator	No Heater
High Voltage Full Load Amps	138.0 a
Insulation Class	F
Inverter Code	Inverter Ready

Part Detail

Revision	C
Type	AC
Mech. spec.	
Base	
Status	PRD/A
Elec. spec.	A44WG3722
Layout	617435-049
Eff. date	07-08-2024
CD Diagram	416820-002
Poles	02
Leads	3#1/0,6#2
Proprietary	False
Created date	12-15-2020

IP Rating	NONE
KVA Code	F
Max Speed	4500 rpm
Motor Lead Quantity/Wire Size	3 @ 1/0 AWG
Motor Standards	NEMA
Motor Type	A4468M
Mounting Arrangement	F1
Number of Poles	2
Overall Length	41.22 IN
Power Factor	89
Product Family	General Industrial
Pulley End Bearing Type	Ball
Pulley Face Code	Standard
Service Factor	1.15
Shaft Diameter	2.375 IN
Shaft Ground Indicator	No Shaft Grounding
Shaft Rotation	Reversible
Shaft Slinger Indicator	Shaft Slinger
Speed	3570 rpm
Speed Code	Single Speed
Starting Method	Direct on line
Thermal Device - Bearing	None
Thermal Device - Winding	None

Nameplate

NP4152LUA

CAT #	XT31252TS			**SER**				**CC**	010A										
SPEC	A44-0002-3722			**RATING**	40C AMB-CONT														
HZ	**VOLTS**		**AMPS**		**RPM**	**HP**	**CODE**	**SF**	**DES**	**PF**		**NEMA NOM. EFF**							
60	230/460		276/138		3570	125	F	1.15	B	89	%	95	%						
											%		%						
PH	3	**CL**	F	**MAX RPM**	4500		**MAX CORR KVAR**	18											
BRG	**DE**	6313	**ODE**	6313	**ENCL**	TEFC	**FR**	444TS	**IP**	54									
GREASE	POLYREX EM						**MTR WT**		**LBS**										
	CL I DIV 2 GRPS A,B,C,D				**CL I ZONE 2 GRPS**			**IIA,IIB,IIC**		**TEMP T**	200	**C**							
INV READY	**CT**	4:1	**HZ**	15-60	**VT**	0-60	**HZ**	1000:1	**CHP**	60-75	**HZ**	1:1.25							
INV TEMP CL	T3	**C**	**USABLE AT**	50HZ 100HP 190/380V 268/134A						1.0SF									
SFA 316/158																			

REL. S.O.	FRAME	HP	TYPE	PHASE/ HERTZ	RPM	VOLTS
	444TS	125	P	3/60	3570	230/460

AMPS	DUTY	AMB °C/ INSUL.	S.F.	NEMA DESIGN	CODE LETTER	ENCL.
276/138	CONT	40/F	1.15	B	F	TEFC

E/S	ROTOR	TEST S.O.	TEST DATE	STATOR RES.@25 °C OHMS (BETWEEN LINES)
---	418143-8-RE	---	---	.00858/.0343

PERFORMANCE

LOAD	HP	AMPERES	RPM	% POWER FACTOR	% EFFICIENCY
NO LOAD	0	30.4	3600	9.10	0
1/4	31.3	51.4	3593	62.9	90.7
2/4	62.5	77.0	3585	80.8	94.2
3/4	93.8	106	3578	87.1	95.0
4/4	125	138	3570	89.3	95.0
5/4	156	172	3561	89.9	94.7

SPEED TORQUE

	RPM	TORQUE % FULL LOAD	TORQUE LB.-FT.	AMPERES
LOCKED ROTOR	0	125	229	873
PULL UP	1250	101	186	804
BREAKDOWN	3461	277	509	456
FULL LOAD	3570	100	184	138

AMPERES SHOWN FOR 460. VOLT CONNECTION. IF OTHER VOLTAGE CONNECTIONS ARE AVAILABLE, THE AMPERES WILL VARY INVERSELY WITH THE RATED VOLTAGE

REMARKS: TYPICAL DATA
XE MOTOR PREMIUM EFF. MOTOR 95%
GUARANTEED MIN. EFF. 94.1%

BALDOR
A MEMBER OF THE ABB GROUP

DR. BY C.E. JAMISON
CK. BY J.P. TSAO
APP. BY E.J.CHRISTIAN
DATE 08/10/11

A-C MOTOR PERFORMANCE DATA

A44WG3722-R003
ISSUE DATE 12/15/20

REL S.O.	RPM 3570	S.F. 1.15	ROTOR 418143-8-RE
FRAME 444TS	VOLTS 230/460	NEMA DESIGN B	TEST S.O. TYPICAL DATA
HP 125	AMPS 276/138	CODE LETTER F	TEST DATE ---
TYPE P	DUTY CONT	ENCLOSURE TEFC	STATOR RES.@ 25 °C .00858/.0343
PHASE/HERTZ 3/60	AMB °C/INSUL 40/F	E/S ---	OHMS (BETWEEN LINES)

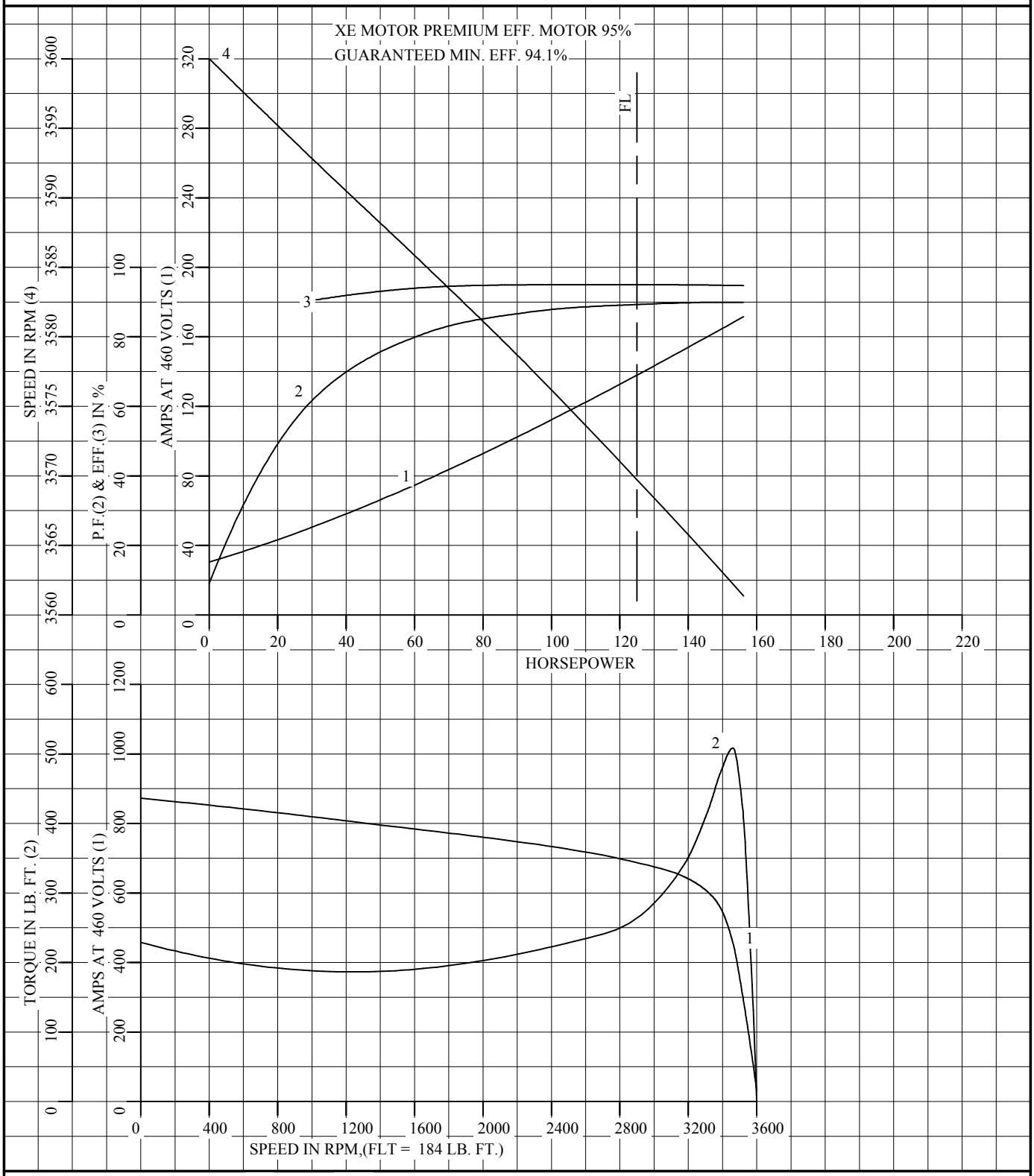

AMPERES SHOWN FOR 460 VOLT CONNECTION, IF OTHER VOLTAGE CONNECTIONS ARE AVAILABLE, THE AMPERES WILL VARY INVERSELY WITH THE RATED VOLTAGE.

BALDOR
A MEMBER OF THE ABB GROUP

DR. BY	C.E. JAMISON
CK. BY	J.P. TSAO
APP. BY	E.J.CHRISTIAN
DATE	08/10/11

A-C MOTOR PERFORMANCE CURVES

A44WG3722-R003

ISSUE DATE 12/15/20

REL. S.O.	RPM 3570	S.F. 1.15	ROTOR 418143-8-RE
FRAME 444TS	VOLTS 230/460	NEMA DESIGN B	TEST S.O. TYPICAL DATA
HP 125	AMPS 276/138	CODE LETTER F	TEST DATE ---
TYPE P	DUTY CONT	ENCLOSURE TEFC	STATOR RES.@ 25 ℃.00858/.0343
PHASE/HERTZ 3/60	AMB ℃/INSUL 40/F	E/S ---	OHMS (BETWEEN LINES)

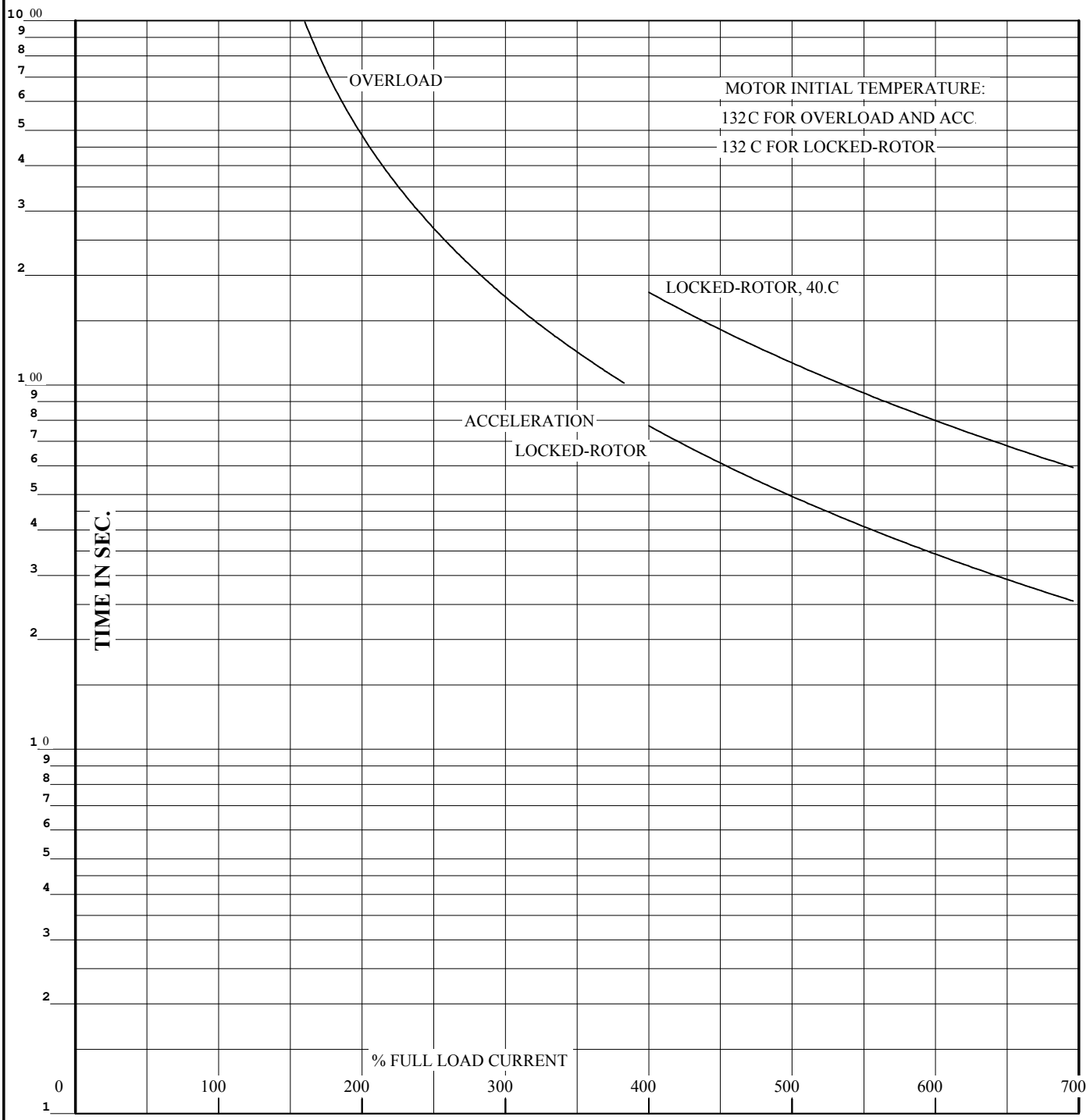

THERMAL LIMIT CURVE

REMARKS:

XE MOTOR PREMIUM EFF. MOTOR 95%

GUARANTEED MIN. EFF. 94.1%

AMPERES SHOWN FOR 460 VOLT CONNECTION, IF OTHER VOLTAGE CONNECTIONS ARE AVAILABLE, THE AMPERES WILL VARY INVERSELY WITH THE RATED VOLTAGE.

BALDOR A MEMBER OF THE ABB GROUP

DR. BY	C.E. JAMISON
CK. BY	J.P. TSAO
APP. BY	E.J.CHRISTIAN
DATE	08/10/11

A-C MOTOR PERFORMANCE CURVES

A44WG3722-R003

ISSUE DATE 12/15/20

DUTY MASTER ALTERNATING CURRENT MOTORS

617435-049

ENCLOSURE: TOTALLY ENCLOSED

SQUIRREL-CAGE INDUCTION

MOUNTING: FOOT, F-1 SIDE

G445TS/G444TS FRAME MOUNTING HOLES

COOLING: FAN COOLED

STEEL CONDUIT BOX

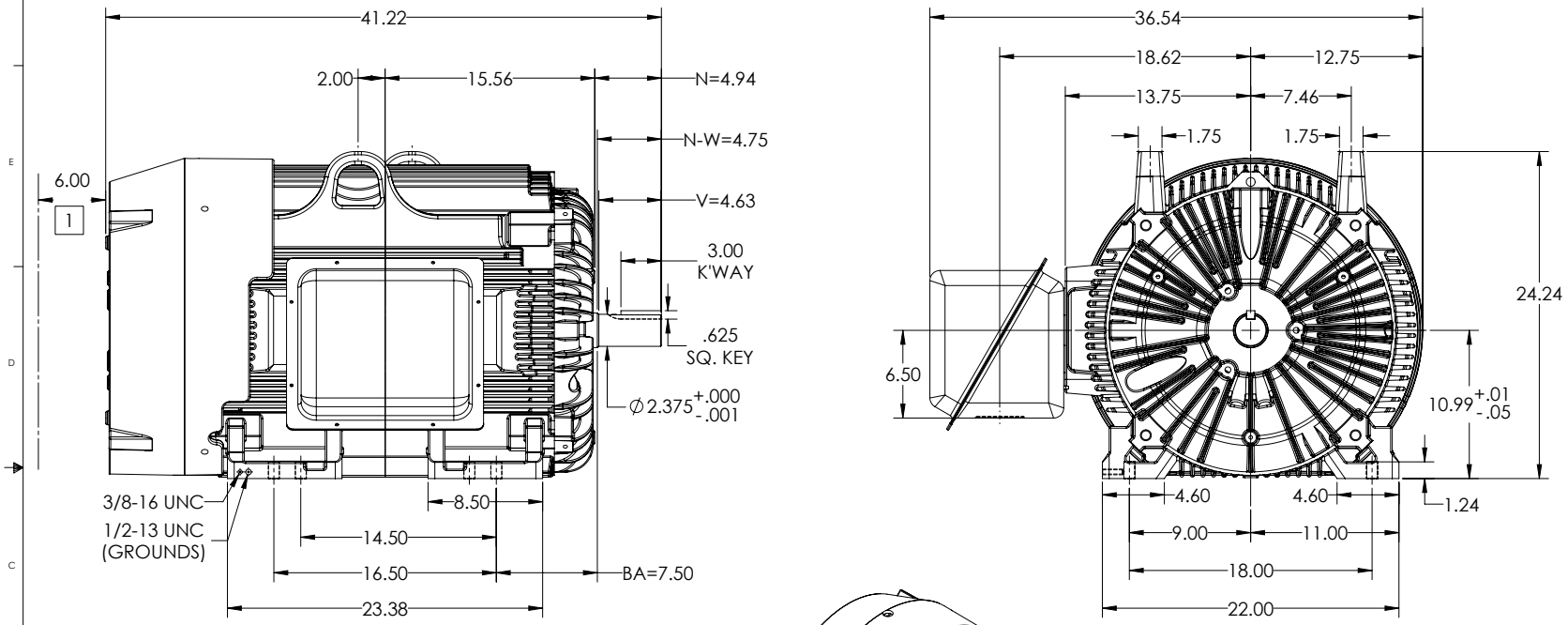

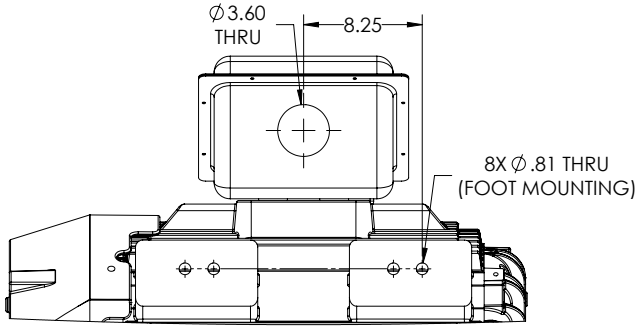

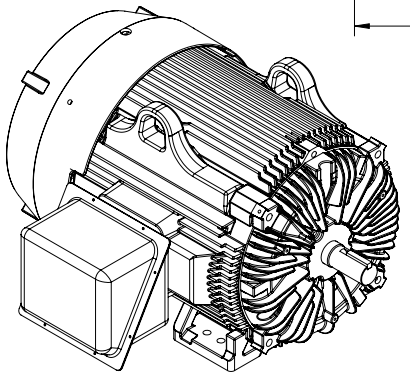

DIMENSIONS ARE IN INCHES
WEIGHT (LBS): 2130, MOTOR WEIGHTS MAY VARY BY 15% DEPENDING ON RATING.
CUSTOMER IS RESPONSIBLE FOR DETERMINING THAT MOTOR PERFORMANCE IS SUITABLE IN THE APPLICATION.

SHEET NUMBER 1 OF 2

617435-049

1 OBSTRUCTION MUST NOT ENCROACH ON AIR INLET

IF MOUNTING CLEARANCE DETAILS ARE REQUIRED, CONSULT FACTORY.
MAX PERMISSIBLE SHAFT RUNOUT WHEN MEASURED AT END OF STANDARD SHAFT EXTENSION IS .003" T.I.R.

REV. DESC: UPDATE DS QUALITY/ADD METRIC DS			
REV: A	VERSION: 01	REVISED: 11:45:13 09/22/2021	TDR: 000001177991
MODEL NO. 617435-049			REF:
BY: USJEDIL	Material:		C

BALDOR

G445/444TS TEFC FOOT F1/STEEL BOX

617435-049

DUTY MASTER ALTERNATING CURRENT MOTORS

617435-049

ENCLOSURE: TOTALLY ENCLOSED

SQUIRREL-CAGE INDUCTION

MOUNTING: FOOT, F-1 SIDE

G445TS/G444TS FRAME MOUNTING HOLES

COOLING: FAN COOLED

STEEL CONDUIT BOX

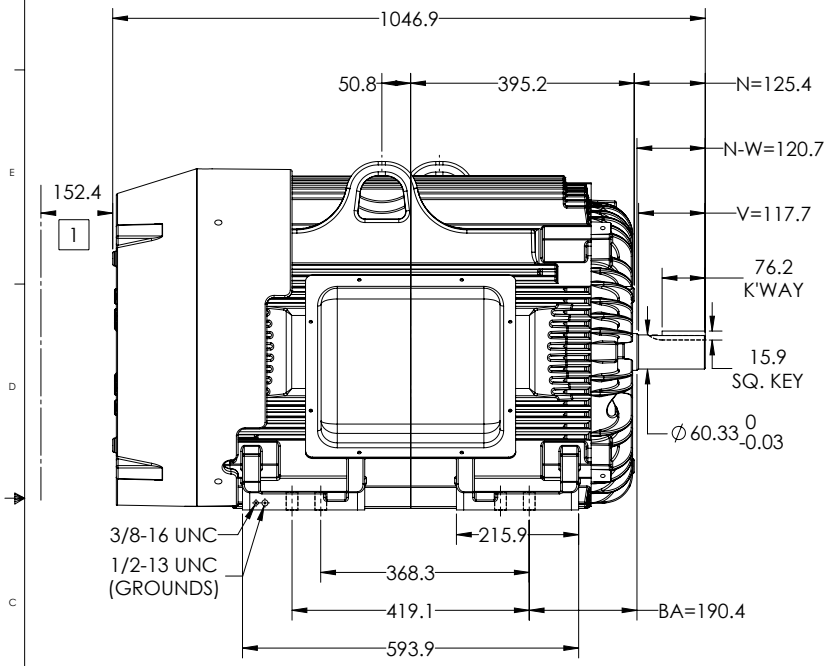

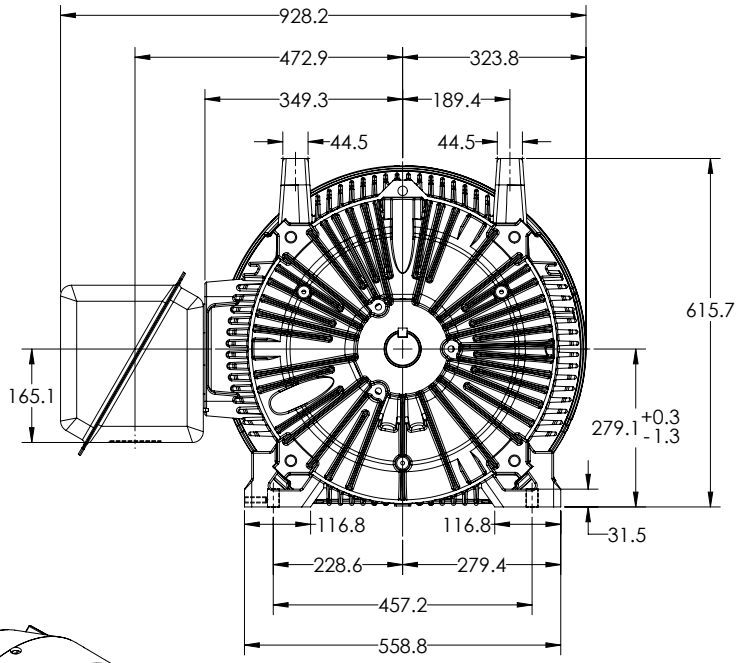

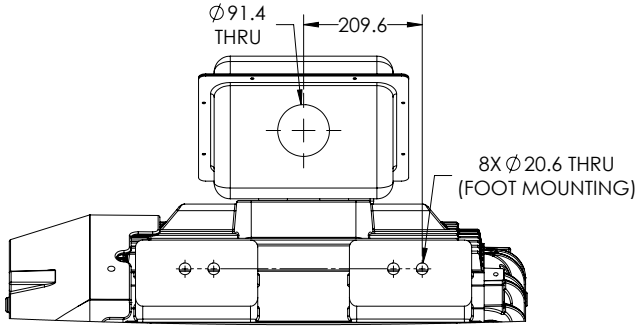

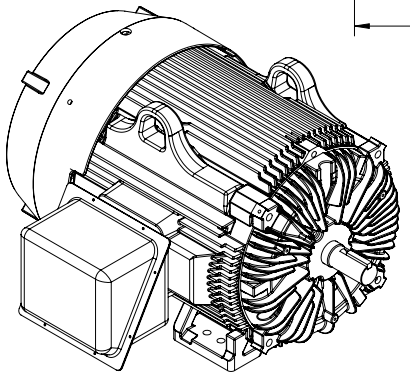

DIMENSIONS ARE IN MILLIMETERS.
WEIGHT (KG): 966. MOTOR WEIGHTS MAY VARY BY 15% DEPENDING ON RATING.
CUSTOMER IS RESPONSIBLE FOR DETERMINING THAT MOTOR PERFORMANCE IS SUITABLE IN THE APPLICATION.

SHEET NUMBER 2 OF 2

617435-049

1 OBSTRUCTION MUST NOT ENCROACH ON AIR INLET

IF MOUNTING CLEARANCE DETAILS ARE REQUIRED, CONSULT FACTORY.
MAX PERMISSIBLE SHAFT RUNOUT WHEN MEASURED AT END OF STANDARD SHAFT EXTENSION IS .08 T.I.R.

REV. DESC: UPDATE DS QUALITY/ADD METRIC DS			
REV: A	VERSION: 01	REVISED: 11:45:13 09/22/2021	TDR: 000001177991
MODEL NO. 617435-049			REF:
BY: USJEDIL	Material:		C

BALDOR

G445/444TS TEFC FOOT F1/STEEL BOX

617435-049

416820-002

A-C MOTOR
CONNECTION DIAGRAM
STANDARD 9 LEAD DELTA-CONNECTED

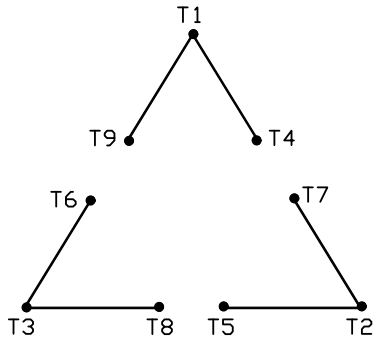

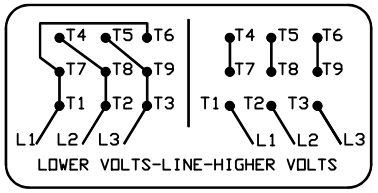

(N. P. 1575-B)

REV. DESC: ADJUST TEXT DARKNESS		
REV. LTR: B	VERSION: 02	TDR: 000001285318
FILE: \RAG\00022\453	REVISED: 09:36:26 09/24/2026	BY: USJOSUL
MTL: –		

ABB

CONN DIAG – STANDARD 9 LEAD, DELTA-CONNECTED

SH1 of 1

416820-002