ABB BALDOR RELIANCE

Customer information packet

XT3752TS

75HP, 3555RPM, 3PH, 60HZ, 365TS, A36068M, TEFC
Class - CLI GP A,B,C,D
Division - Division II

Copyright © All product information within this document is subject to ABB Motors and Mechanical Inc. copyright © protection, unless otherwise noted.
11/5/2026 9:24:18 AM

Specifications

Enclosure	TEFC
Frame	365TS
Frame Material	Iron
Frequency	60.00 Hz
Haz Area Class and Group	CLI GP A,B,C,D
Haz Area Division	Division II
Motor Letter Type	Three Phase
Output @ Frequency	75.000 HP @ 60 HZ
Phase	3
Synchronous Speed @ Frequency	3600 RPM @ 60 HZ
Voltage @ Frequency	230.0 V @ 60 HZ
	460.0 V @ 60 HZ
Agency Approvals	CCSAUSEEV
	NEMA PREMIUM
	NEMA_PREMIUM
	UR
Ambient Temperature	40 °C
Auxiliary Box	NO AUXILLARY BOX
Base Indicator	Rigid
Bearing Grease Type	Polyrex EM (-20F +300F)
Current @ Voltage	81.800 A @ 460.0 V
	182.000 A @ 208.0 V
	164.000 A @ 230.0 V
Design Code	B
Drip Cover	No Drip Cover
Duty Rating	CONT
Efficiency @ 100% Load	93.6 %
Feedback Device	NO FEEDBACK
Heater Indicator	No Heater
High Voltage Full Load Amps	81.8 a
Insulation Class	F
Inverter Code	Inverter Ready

Part Detail

Revision	E
Type	AC
Mech. spec.	
Base	
Status	PRD/A
Elec. spec.	A36WG0026
Layout	617428-328
Eff. date	07-08-2024
CD Diagram	416820-002
Poles	02
Leads	3#2,6#4
Proprietary	False
Created date	11-11-2020

IP Rating	NONE
KVA Code	F
Lifting Lugs	Standard Lifting Lugs
Max Speed	4500 rpm
Motor Lead Quantity/Wire Size	3 @ 2 AWG
Motor Standards	NEMA
Motor Type	A36068M
Mounting Arrangement	F1
Number of Poles	2
Overall Length	31.35 IN
Power Factor	92
Product Family	General Industrial
Pulley End Bearing Type	Ball
Pulley Face Code	Standard
Service Factor	1.15
Shaft Diameter	1.875 IN
Shaft Ground Indicator	No Shaft Grounding
Shaft Rotation	Reversible
Shaft Slinger Indicator	Shaft Slinger
Speed	3555 rpm
Speed Code	Single Speed
Starting Method	Direct on line
Thermal Device - Bearing	None
Thermal Device - Winding	None

Nameplate

NP4152LUA

CAT #	XT3752TS			**SER**				**CC**	010A										
SPEC	A36-5005-0026			**RATING**	40C AMB-CONT														
HZ	**VOLTS**			**AMPS**			**RPM**	**HP**	**CODE**	**SF**	**DES**	**PF**		**NEMA NOM. EFF**					
60	230/460			164/81.8			3555	75	F	1.15	B	92	%	93.6	%				
													%		%				
PH	3	**CL**	F	**MAX RPM**	4500		**MAX CORR KVAR**	5											
BRG	**DE**	6313		**ODE**	6313		**ENCL**	TEFC		**FR**	365TS		**IP**	54					
GREASE	POLYREX EM									**MTR WT**			**LBS**						
		CL I DIV 2 GRPS A,B,C,D					**CL I ZONE 2 GRPS**				**IIA,IIB,IIC**			**TEMP T**	200	**C**			
INV READY	**CT**	10-60	**HZ**	6:1	**VT**	0-60	**HZ**	1000:1	**CHP**	60-75	**HZ**	1:1.25							
INV TEMP CL	T3	**C**	**USABLE AT**	50HZ 60HP 190/380V 160/80.2A							1.0SF								
SFA 191/95.5																			

REL. S.O.	FRAME	HP	TYPE	PHASE/ HERTZ	RPM	VOLTS
	365TCZ	75	P	3/60	3555	230/460

AMPS	DUTY	AMB °C/ INSUL.	S.F.	NEMA DESIGN	CODE LETTER	ENCL.
164/81.8	CONT	40/F	1.15	B	F	TEFC

E/S	ROTOR	TEST S.O.	TEST DATE	STATOR RES.@25 °C OHMS (BETWEEN LINES)
892019	418141005TE	---	---	.0186/.0744

PERFORMANCE

LOAD	HP	AMPERES	RPM	% POWER FACTOR	% EFFICIENCY
NO LOAD	0	15.5	3600	12.6	0
1/4	18.8	24.9	3589	78.9	89.3
2/4	37.5	41.4	3578	91.1	93.1
3/4	56.2	60.8	3567	92.3	93.9
4/4	75.0	81.8	3555	91.6	93.8
5/4	93.8	104	3542	90.9	93.3

SPEED TORQUE

	RPM	TORQUE % FULL LOAD	TORQUE LB.-FT.	AMPERES
LOCKED ROTOR	0	218	242	494
PULL UP	1565	188	209	440
BREAKDOWN	3395	226	250	259
FULL LOAD	3555	100	111	81.8

AMPERES SHOWN FOR 460. VOLT CONNECTION. IF OTHER VOLTAGE CONNECTIONS ARE AVAILABLE, THE AMPERES WILL VARY INVERSELY WITH THE RATED VOLTAGE

REMARKS: TYPICAL DATA
XE MOTOR-NEMA NOM. EFF. 93.6 %
GUARANTEED MIN. EFF. 92.4%

BALDOR
A MEMBER OF THE ABB GROUP

DR. BY C.E. JAMISON
CK. BY W.L. SMITH
APP. BY E.J.CHRISTIAN
DATE 08/17/17

A-C MOTOR PERFORMANCE DATA A36WG0026-R005
ISSUE DATE 04/01/21

REL S.O.		RPM	3555	S.F.	1.15	ROTOR	418141005TE
FRAME	365TCZ	VOLTS	230/460	NEMA DESIGN	B	TEST S.O.	TYPICAL DATA
HP	75	AMPS	164/81.8	CODE LETTER	F	TEST DATE	---
TYPE	P	DUTY	CONT	ENCLOSURE	TEFC	STATOR RES.@ 25 °C	.0186/.0744
PHASE/HERTZ	3/60	AMB °C/INSUL	40/F	E/S	892019		OHMS (BETWEEN LINES)

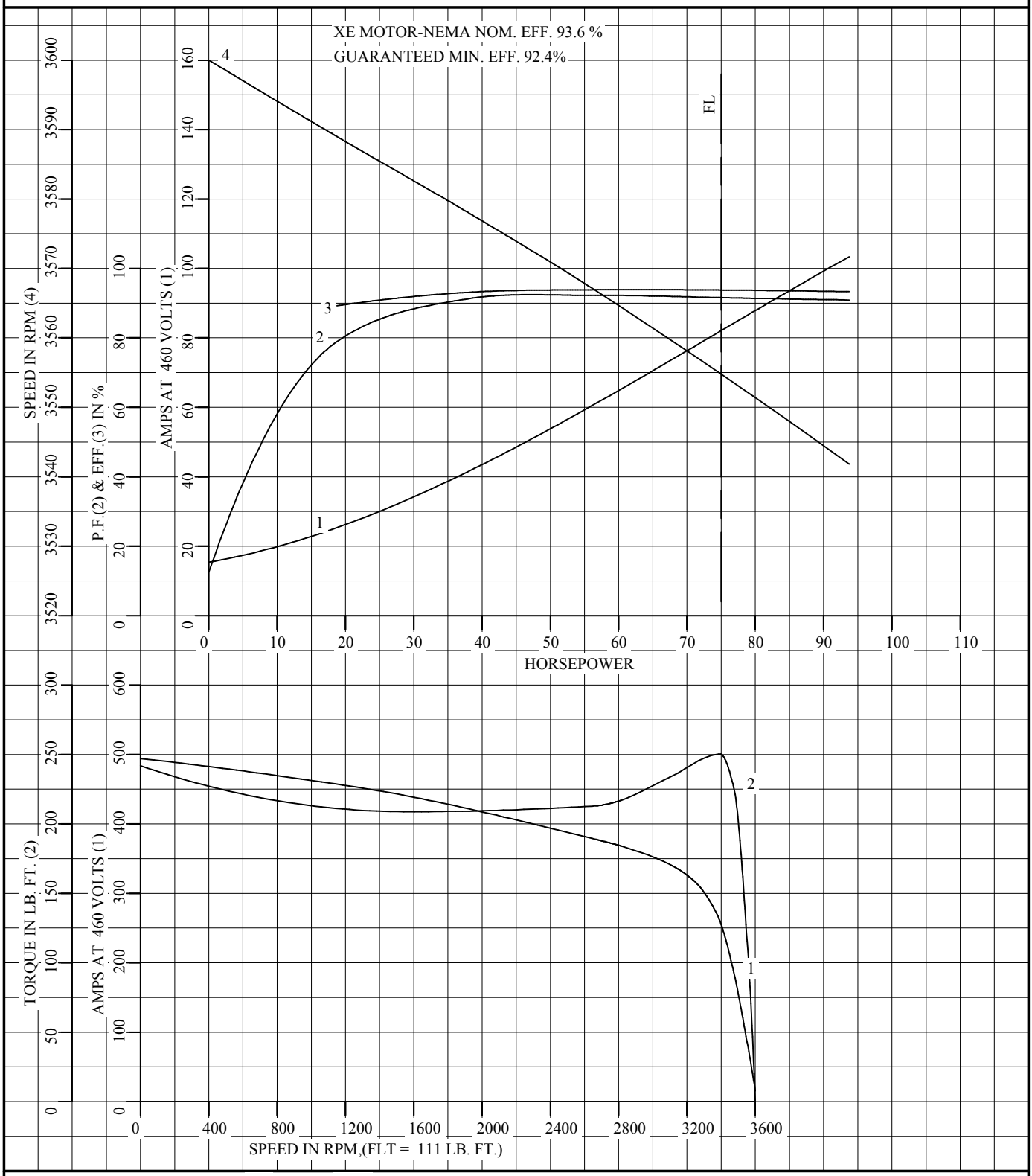

AMPERES SHOWN FOR 460 VOLT CONNECTION, IF OTHER VOLTAGE CONNECTIONS ARE AVAILABLE, THE AMPERES WILL VARY INVERSELY WITH THE RATED VOLTAGE.

BALDOR
A MEMBER OF THE ABB GROUP

DR. BY	C.E. JAMISON
CK. BY	W.L. SMITH
APP. BY	E.J.CHRISTIAN
DATE	08/17/17

A-C MOTOR PERFORMANCE CURVES

A36WG0026-R005

ISSUE DATE 04/01/21

REL. S.O.	RPM 3555	S.F. 1.15	ROTOR 418141005TE
FRAME 365TCZ	VOLTS 230/460	NEMA DESIGN B	TEST S.O. TYPICAL DATA
HP 75	AMPS 164/81.8	CODE LETTER F	TEST DATE ---
TYPE P	DUTY CONT	ENCLOSURE TEFC	STATOR RES.@ 25 °C.0186/.0744
PHASE/HERTZ 3/60	AMB °C/INSUL 40/F	E/S 892019	OHMS (BETWEEN LINES)

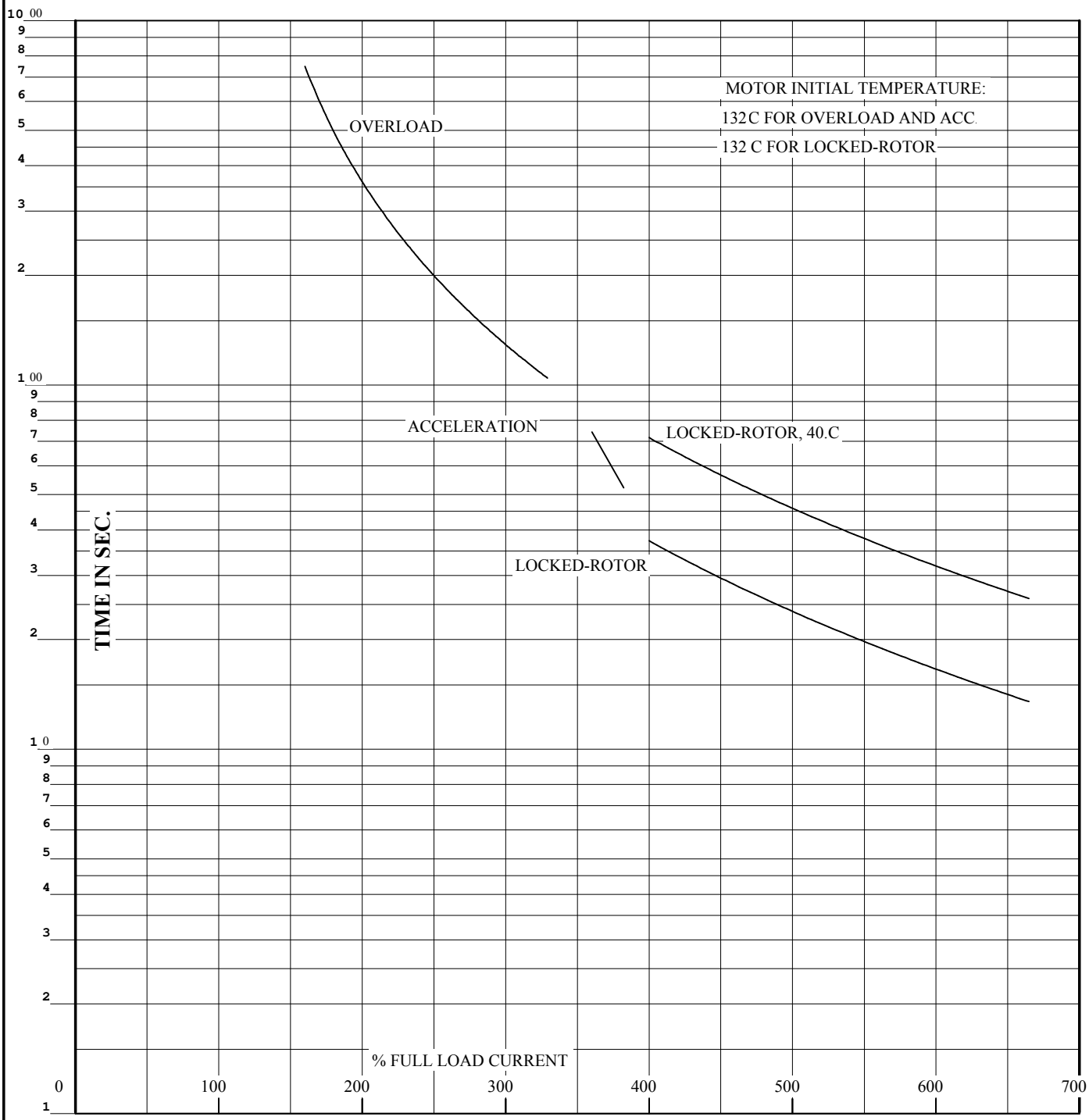

THERMAL LIMIT CURVE

REMARKS:

XE MOTOR-NEMA NOM. EFF. 93.6 %

GUARANTEED MIN. EFF. 92.4%

AMPERES SHOWN FOR 460 VOLT CONNECTION, IF OTHER VOLTAGE CONNECTIONS ARE AVAILABLE, THE AMPERES WILL VARY INVERSELY WITH THE RATED VOLTAGE.

BALDOR A MEMBER OF THE ABB GROUP

DR. BY	C.E. JAMISON
CK. BY	W.L. SMITH
APP. BY	E.J.CHRISTIAN
DATE	08/17/17

A–C MOTOR PERFORMANCE CURVES

A36WG0026-R005

ISSUE DATE 04/01/21

DUTY MASTER ALTERNATING CURRENT MOTORS

SQUIRREL-CAGE INDUCTION

617428-328

ENCLOSURE: TOTALLY ENCLOSED

MOUNTING: FOOT, F-1 SIDE

FRAME E365TS
INCLUDES E364TS FRAME MOUNTING HOLES

STEEL MAIN CONDUIT BOX

COOLING: FAN COOLED

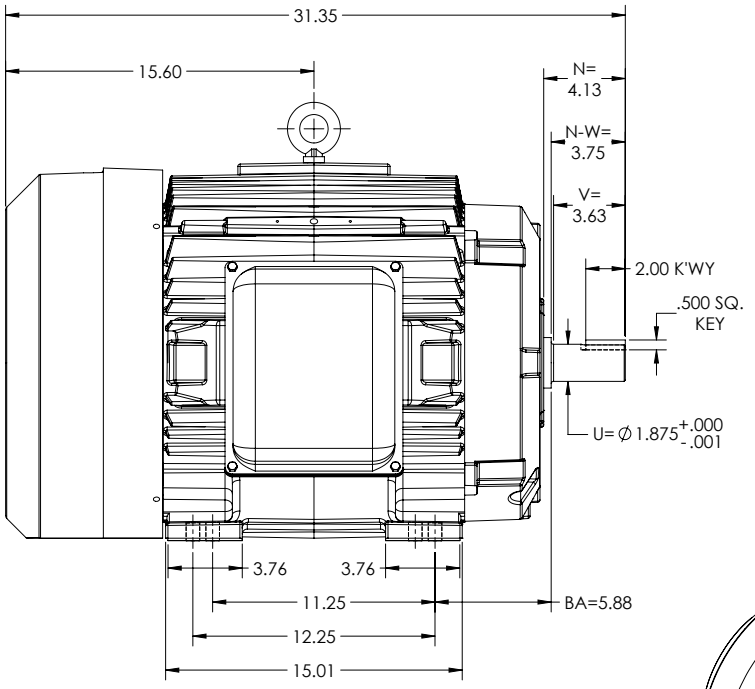

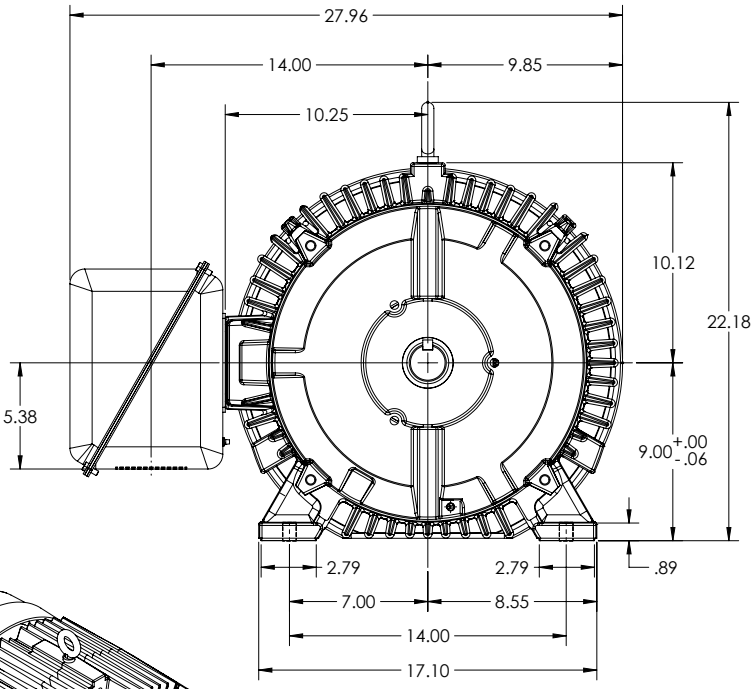

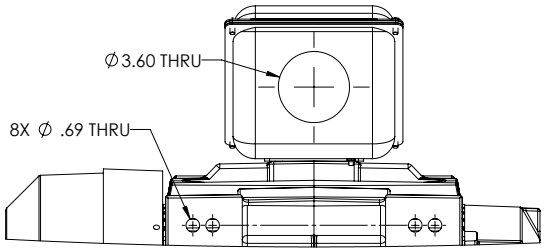

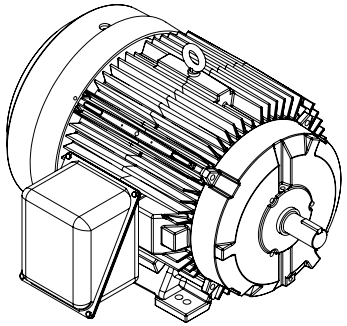

DIMENSIONS ARE IN INCHES

CUSTOMER IS RESPONSIBLE FOR DETERMINING THAT MOTOR PERFORMANCE IS SUITABLE IN THE APPLICATION.

MAXIMUM PERMISSIBLE SHAFT RUNOUT WHEN MEASURED AT END OF STANDARD SHAFT EXTENSION IS .003" T.I.R. TO 5 INCH DIA.

REV. DESC: NEW			
REV: -	VERSION: 00	REVISED: 09:19:57 01/12/2018	TDR: 000001053758
MODEL NO. 617428-328			
BY: RAGBXN			C

BALDOR

E365TS TEFC FOOT - F1 - STEEL CONDUIT BOX

617428-328

416820-002

A-C MOTOR
CONNECTION DIAGRAM
STANDARD 9 LEAD DELTA-CONNECTED

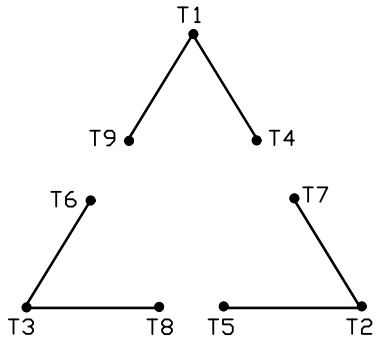

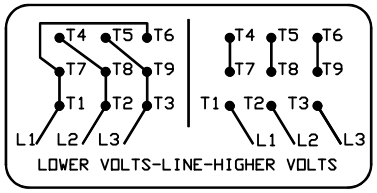

(N. P. 1575-B)

REV. DESC: ADJUST TEXT DARKNESS		
REV. LTR: B	VERSION: 02	TDR: 000001285318
FILE: \RAG\00022\453	REVISED: 09:36:26 09/24/2026	BY: USJOSUL
MTL: –		

ABB

CONN DIAG – STANDARD 9 LEAD, DELTA-CONNECTED

SH1 of 1

416820-002