INSTRUCTION

15684

1. TO START THE CLOCK:

- INSERT ONE 1.5 VOLT "AA" BATTERY (ALKALINE BATTERIES ARE RECOMMENDED) IN THE BATTERY COMPARTMENT. BE SURE THAT THE (+) POSITIVE AND (-) NEGATIVE TERMINALS CORRECTLY MATCH WITH THE SYMBOLS ON THE BATTERY COMPARTMENT. THEN THE CLOCK WILL START. PUT THE BATTERY COVER BACK.

2. TO SET THE TIME:

- TURN THE TIME KNOB ON THE BACK OF THE CLOCK TO SET THE HANDS TO THE TIME YOU DESIRED.

3. TO SET ALARM TIME:

- TURN THE ALARM KNOB COUNTER CLOCK WISE TO SET THE ALARM HAND AT THE DESIRED TIME

4. TO TURN THE ALARM ON OR OFF:

- TO ACTIVATE THE ALARM, PUSH THE ALARM ON/OFF SWITCH TO ON.
- TO DEACTIVATE THE ALARM, PUSH THE ALARM ON/OFF SWITCH TO OFF.

5. CARE OF YOUR CLOCK:

- REPLACE THE BATTERY PROMPTLY WHEN NECESSARY AND STORE THE CLOCK WITHOUT BATTERY WHEN NOT IN USE.
- BE SURE TO USE AN ALKALINE "AA" BATTERY.
- DO NOT OPEN THE BACK CASE OF THE CLOCK AS YOU MAY DAMAGE THE CLOCK MOVEMENT.
- CLEAN YOUR CLOCK WITH A SOFT CLOTH OR PAPER TOWEL. DO NOT USE CORROSIVE CLEANERS OR CHEMICAL SOLUTIONS ON THE CLOCK.
- AVOID PUTTING THE CLOCK IN A HIGHLY HUMID ENVIRONMENT SUCH AS POOLSIDE OR IN A BATHROOM.
- DO NOT EXPOSE THE CLOCK TO DIRECT SUNLIGHT, EXTREME HOT OR COLD TEMPERATURES.

6. BATTERY WARNING

- FOLLOW THE POLARITY (+) AND (-) TO PLACE BATTERY.
- INCORRECT BATTERY PLACEMENT WILL DAMAGE THE CLOCK MOVEMENT AND BATTERY MAY LEAK.
- EXHAUSTED BATTERY IS TO BE REMOVED FROM THE PRODUCT.
- REMOVE BATTERIES FROM EQUIPMENT WHICH IS NOT TO BE USED FOR AN EXTENDED PERIOD OF TIME.
- DO NOT DISPOSE OF BATTERIES IN FIRE. BATTERIES MAY EXPLODE OR LEAK. CHANGE THE BATTERY ONCE A YEAR IN ORDER TO MAINTAIN ACCURACY.

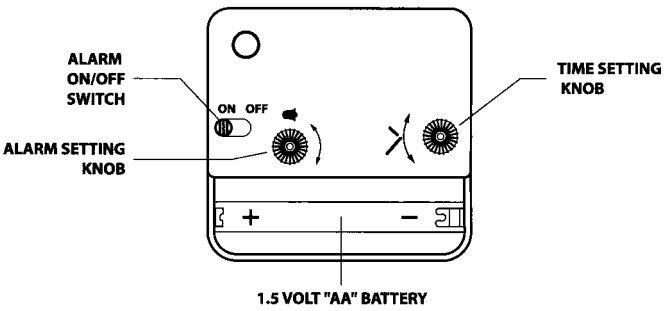

1) PULL OUT THE DETACHABLE STAND FROM BACK OF THE CLOCK.

2) INSERT THE STAND INTO THE SLOT AS INDICATED IN DIAGRAM.

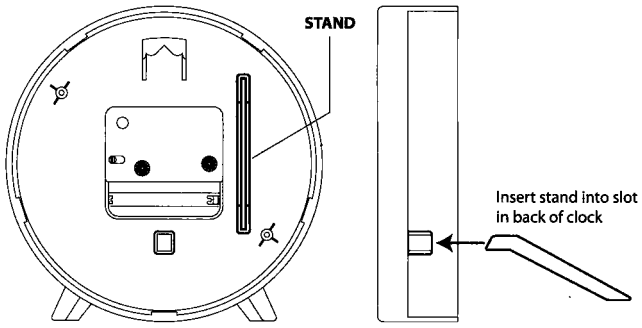

NOTE: ATTENTION! PLEASE DISPOSE OF USED UNIT AND BATTERIES IN AN ECOLOGICALLY SAFE MANNER.