ABB BALDOR RELIANCE

Customer information packet

JM3107-TAP

.5HP/3450RPM/OPEN/NEMA 56CZ
Class -
Division - Not Applicable

Copyright © All product information within this document is subject to ABB Motors and Mechanical Inc. copyright © protection, unless otherwise noted.
11/5/2026 5:10:54 PM

Specifications

Enclosure	ODP
Frame	56CZ
Frame Material	Steel
Frequency	60.00 Hz
Haz Area Division	Not Applicable
Output @ Frequency	.500 HP @ 60 HZ
Phase	3
Synchronous Speed @ Frequency	3600 RPM @ 60 HZ
Voltage @ Frequency	230.0 V @ 60 HZ
	460.0 V @ 60 HZ
Agency Approvals	UR
	CSA
Ambient Temperature	40 °C
Auxiliary Box	NO AUXILLARY BOX
Auxiliary Box Lead Termination	None
Base Indicator	No Mounting
Bearing Grease Type	Polyrex EM (-20F +300F)
Blower	None
Current @ Voltage	1.200 A @ 460.0 V
	2.400 A @ 230.0 V
	3.100 A @ 208.0 V
Design Code	B
Drip Cover	Drip Cover
Duty Rating	CONT
Efficiency @ 100% Load	70.0 %
Electrically Isolated Bearing	Not Electrically Isolated
Feedback Device	NO FEEDBACK
Front Face Code	Terminal Panel
Front Shaft Indicator	None
Heater Indicator	No Heater
High Voltage Full Load Amps	1.2 a
Insulation Class	B

Part Detail

Revision	Q
Type	AC
Mech. spec.	34L031
Base	
Status	NLA/A
Elec. spec.	34WG2718
Layout	34LYL031
Eff. date	08-07-2015
CD Diagram	CD0005
Poles	02
Leads	9#18
Proprietary	False
Created date	01-01-0001

Inverter Code	Not Inverter
KVA Code	N
Lifting Lugs	No Lifting Lugs
Locked Bearing Indicator	Locked Bearing
Motor Lead Exit	Lead Hole
Motor Lead Quantity/Wire Size	9 @ 18 AWG
Motor Lead Termination	Cord And Plug
Motor Standards	NEMA
Motor Type	3413M
Mounting Arrangement	F1
Number of Poles	2
Overall Length	11.02 IN
Power Factor	65
Product Family	General Purpose
Pulley End Bearing Type	Ball
Pulley Face Code	C-Face
Pulley Shaft Indicator	Drilled And Tapped Hole
Rodent Screen	None
Service Factor	1.60
Shaft Diameter	0.625 IN
Shaft Extension Location	Pulley End
Shaft Ground Indicator	No Shaft Grounding
Shaft Rotation	Reversible
Shaft Slinger Indicator	Shaft Slinger
Speed	3450 rpm
Speed Code	Single Speed
Starting Method	Direct on line
Thermal Device - Bearing	None
Thermal Device - Winding	None
Vibration Sensor Indicator	No Vibration Sensor

Nameplate

NP1256L											
CAT.NO.											
SPEC.	34L031-2718										
HP	.5										
VOLTS	230/460										
AMP	2.4/1.2										
RPM	3450										
FRAME	56CZ		**HZ**	60			**PH**	3			
SER.F.	1.60	**CODE**	N	**DES**	B	**CLASS**		B			
NEMA-NOM-EFF	70	**PF**	65								
RATING	40C AMB-CONT										
CC											
DE	6203		**ODE**	6203							
ENCL	OPEN	**SN**									
	SFA 2.8/1.4										

34LYL031

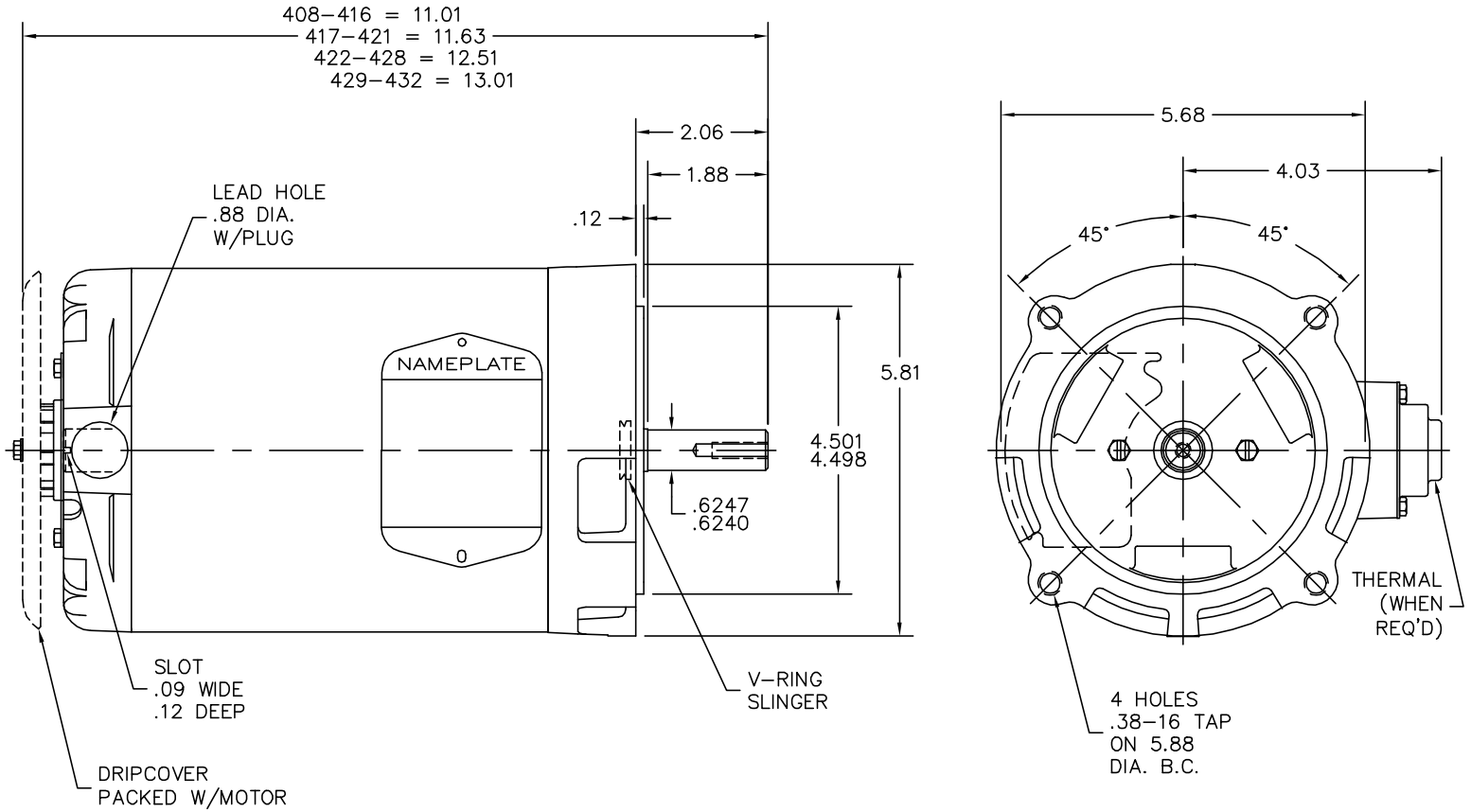

34LYL031

CUSTOMER IS RESPONSIBLE FOR DETERMINING THAT BALDOR'S PRODUCT WILL PERFORM SUITABLY IN THE INTENDED APPLICATION.

REV. DESC: UPDATE PARTS, ADD/FIX DIMS & STANDARIZE DESC.		
REV. LTR: D	VERSION: 02	TDR: 000000937572
FILE: \AAA\00050\348	REVISED: 02:05:02 08/04/2015	BY: ENMAIY0
MTL: –		

BALDOR

VERT 34M NEMA 56CZ OPEN W/TERM PLATE

SH 1 of 1

CD0005

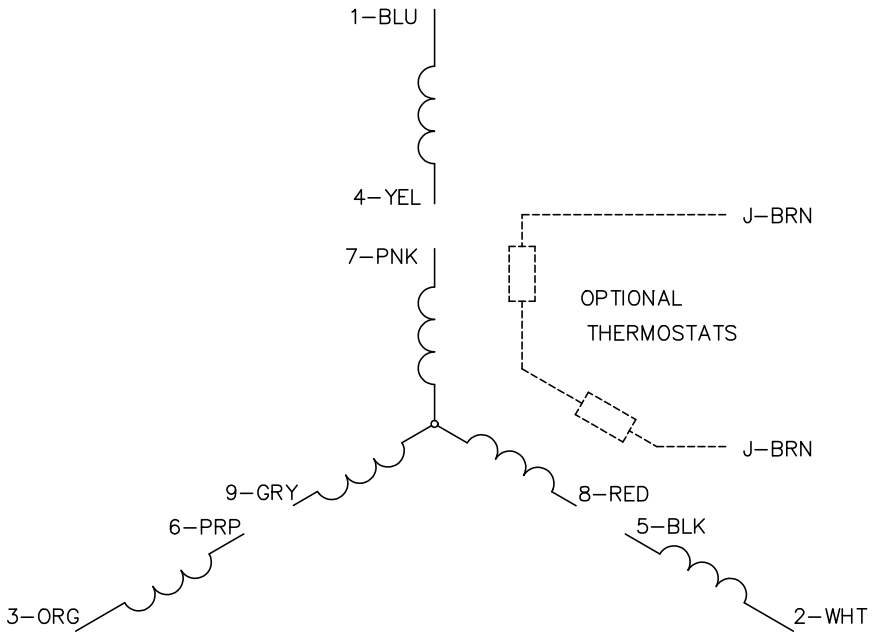

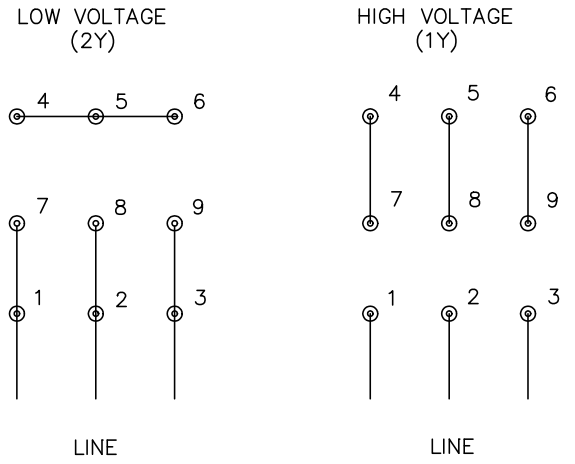

NOTES:

1. INTERCHANGE ANY TWO LINE LEADS TO REVERSE ROTATION.
2. OPTIONAL THERMOSTATS ARE PROVIDED WHEN SPECIFIED.
3. ACTUAL NUMBER OF INTERNAL PARALLEL CIRCUITS MAY BE A MULTIPLE OF THOSE SHOWN ABOVE.
4. LEAD COLORS ARE OPTIONAL. LEADS MUST ALWAYS BE NUMBERED AS SHOWN.

CD0005

REV. DESC: REVISE TO SHOW OPTIONAL COLORS			BALDOR ELECTRIC Co.
REV. LTR: E	BY: JLP	REVISED: 01/19/99 10:15	TDR: 0171435
CD0005		FILE: AAA00005140	MDL: –
		MTL: –	3PH, DV, 9 LEADS