marathon®

General Purpose Motors

Model No: 405TTFCD6080
Catalog No: GT1144A

General Purpose Motor, 75 HP, 3 Ph, 60 Hz, 575 V, 1200 RPM, 405T Frame, TEFC

©2026 Marathon, All Rights Reserved.

marathon®

Product Information Packet: Model No: 405TTFCD6080, Catalog No: GT1144A General Purpose Motor, 75 HP, 3 Ph, 60 Hz, 575 V, 1200 RPM, 405T Frame, TEFC

Nameplate Specifications

Phase	**3**	Output HP	**75 Hp**
Output KW	**56.0 kW**	Voltage	**575 V**
Speed	**1188 r/min**	Synchronous RPM	**1200 r/min**
Service Factor	**1.15**	Frame	**405T**
Enclosure	**Totally Enclosed Fan Cooled**	Thermal Protection	**No Protection**
Efficiency	**94.5 %**	Ambient Temperature	**40 °C**
Frequency	**60 Hz**	Current	**71.0 A**
Power Factor	**83.5**	Duty	**Continuous**
Insulation Class	**F**	Design Code	**B**
KVA Code	**G**	Drive End Bearing Size	**6316**
Opp Drive End Bearing Size	**6314**	UL	**Listed**
CSA	**Y**	CE	**Y**
IP Code	**55**	Number of Speeds	**1**
Hazardous Location	**DIVISION 2 T2B**		

Technical Specifications

Electrical Type	**Squirrel Cage Inverter Rated**	Starting Method	**Line Or Inverter**
Poles	**6**	Rotation	**Reversible**
Resistance Main	**.0904 O**	Mounting	**Rigid Base**
Motor Orientation	**Horizontal**	Drive End Bearing	**Ball**
Opp Drive End Bearing	**Ball**	Frame Material	**Cast Iron**
Shaft Type	**T**	Overall Length	**38.77 in**
Shaft Diameter	**2 7/8 in**	Shaft Extension	**7.25 in**
Assembly/Box Mounting	**F1/F2 Capable**	Inverter Load	**Constant 2:1/Variable 10:1**

Drawings

Connection Drawing	**EE7300**	Outline Drawing	**SS557005**

This is an uncontrolled document once printed or downloaded and is subject to change without notice. Date Created: 16/10/2026

B	C	E	2E	2F	2FF	BA	BS	MOUNTING
16.85	38.77	8.00	16.00	12.25	13.75	6.62	6.87	F1 OR F2

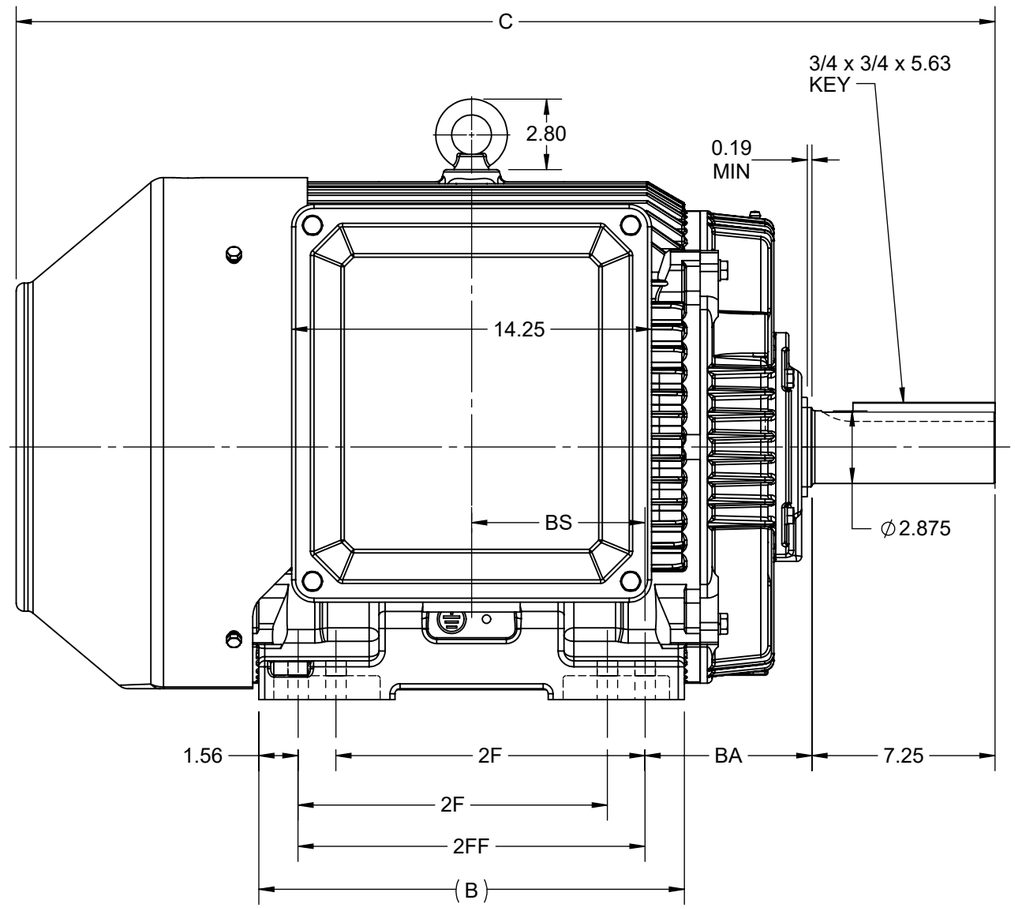

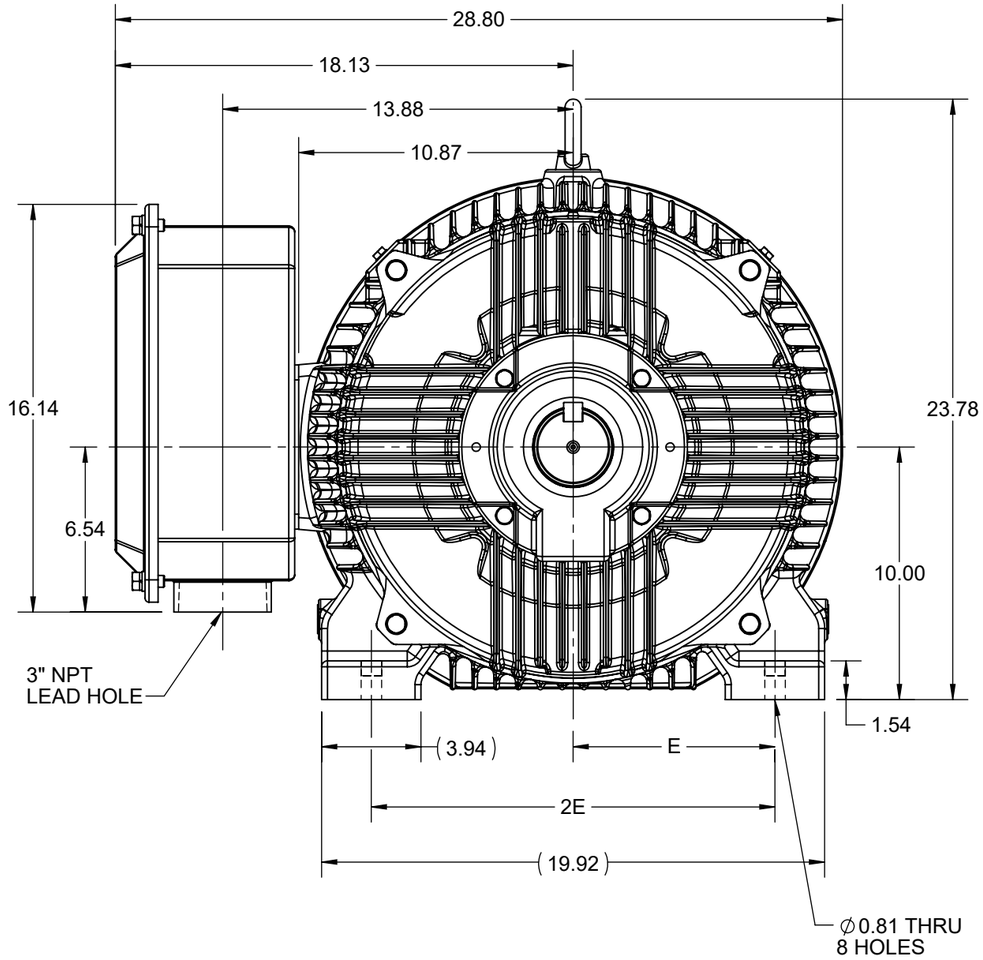

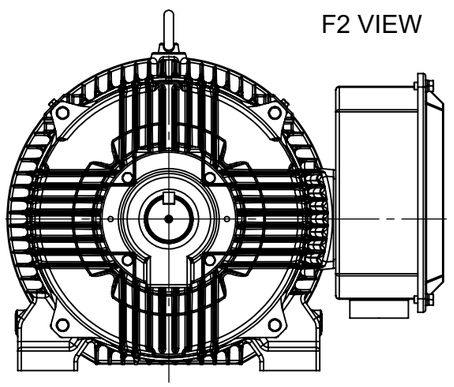

DRAWING REVISION	REVISION BY	REV DATE/© DATE
D	SB	08/20/2025
REQUEST NUMBER	APPROVED BY	DATE
CR-0023556	SBD	08/20/2025

REQUEST NUMBER DESCRIPTION
DRAWING TITLE BLOCK UPDATED

COPYRIGHT (PER REVISION DATE) MARATHON ELECTRIC, LLC. ALL RIGHTS RESERVED. PROPRIETARY AND CONFIDENTIAL INFORMATION - THIS DOCUMENT IS THE PROPERTY OF MARATHON ELECTRIC, LLC. ("OWNER") AND CONTAINS OWNER'S PROPRIETARY INFORMATION. ANY PERSON, CORPORATION OR OTHER FIRM RECEIVING IT IS DEEMED, BY RECEIVING IT, TO AGREE THAT IT, AND/OR ANY PART OF IT, SHALL NOT BE DISCLOSED TO ANY PERSON, CORPORATION OR OTHER ENTITY, DUPLICATED, AND/OR USED, EXCEPT AS EXPRESSLY APPROVED IN WRITING IN ADVANCE BY OWNER. THIS DOCUMENT SHALL BE RETURNED TO OWNER UPON REQUEST. IT MAY BE SUBJECT TO CERTAIN RESTRICTIONS UNDER APPLICABLE EXPORT CONTROL LAWS AND REGULATIONS.

PRIMARY DIMENSIONS ARE INCH
mm DIMENSIONS IN [BRACKETS]
ARE FOR REFERENCE ONLY

DRAWN BY	NIV
DATE	25/03/2016
APPROVED BY	SBD
DATE	25/03/2016
REFERENCE	

THIRD ANGLE PROJECTION

marathon™

DESCRIPTION
OUTLINE
404/405T FR-NEMA-TEFC

MATERIAL | PROCESS/FINISH

SIZE	DRAWING NUMBER	SHEET
B	SS557005	1 OF 1

THREE PHASE - SINGLE VOLTAGE
MOTOR - CONDUIT BOX @ 'A'

TO REVERSE ROTATION:
INTERCHANGE ANY TWO LINE
LEAD CONNECTIONS

TERMINAL BLOCK WHEN SPECIFIED

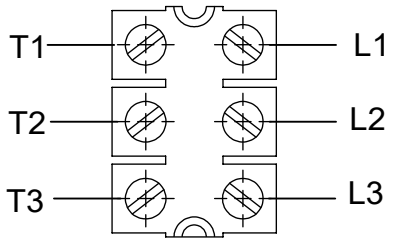

VIEW OF TERMINAL END

IF MOTOR HAS
9 LEADS

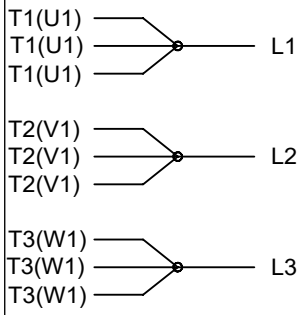

IF MOTOR HAS
6 LEADS

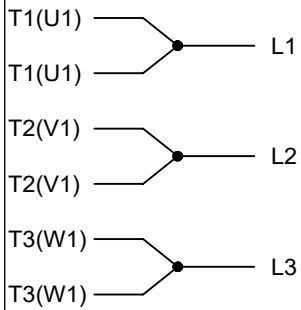

A-9806 DECAL

OPTIONAL CORD
CONNECTION

L1	WHITE
L2	RED
L3	BLACK

DRAWING REVISION: AD	REVISION BY: SB	REV DATE/© DATE: 08/01/2025
REQUEST NUMBER: CR-0023654	APPROVED BY: SBD	DATE: 08/01/2025

REQUEST NUMBER DESCRIPTION
DRAWING TITLE BLOCK UPDATED

COPYRIGHT (PER REVISION DATE) MARATHON ELECTRIC, LLC. ALL RIGHTS RESERVED. PROPRIETARY AND CONFIDENTIAL INFORMATION - THIS DOCUMENT IS THE PROPERTY OF MARATHON ELECTRIC, LLC. ("OWNER") AND CONTAINS OWNER'S PROPRIETARY INFORMATION. ANY PERSON, CORPORATION OR OTHER FIRM RECEIVING IT IS DEEMED, BY RECEIVING IT, TO AGREE THAT IT, AND/OR ANY PART OF IT, SHALL NOT BE DISCLOSED TO ANY PERSON, CORPORATION OR OTHER ENTITY, DUPLICATED, AND/OR USED, EXCEPT AS EXPRESSLY APPROVED IN WRITING IN ADVANCE BY OWNER. THIS DOCUMENT SHALL BE RETURNED TO OWNER UPON REQUEST. IT MAY BE SUBJECT TO CERTAIN RESTRICTIONS UNDER APPLICABLE EXPORT CONTROL LAWS AND REGULATIONS.

PRIMARY DIMENSIONS ARE INCH
mm DIMENSIONS IN [BRACKETS]
ARE FOR REFERENCE ONLY

DRAWN BY: DA	
DATE: 03-26-1993	
APPROVED BY: TB	
DATE: 03-26-1993	
REFERENCE	
THIRD ANGLE PROJECTION	

marathon™

DESCRIPTION
CONNECTION DIAGRAM
EXTERNAL - SINGLE VOLTAGE - 3Ø MOTOR

MATERIAL	PROCESS/FINISH

SIZE	DRAWING NUMBER	SHEET
A	EE7300	1 OF 1

Data Sheet

Date: 16-06-2017
Customer:
Attention:
Submitted by: FAREEDA DUDEKULA

marathon® electric

405TTFCD6080

Submittal

Data @ 575 V

Motor Load Data

Load	0%	25%	50%	75%	100%	115%	125%	LR	
Current (Amps)	28.0	32.4	42.8	56.4	71.2	82.0	89.2	434	
Torque (ft-lb)	0.00	82.5	165	248	332	382	416	646	
RPM	1200	1196	1195	1192	1188	1,188	1185	0	
Efficiency (%)		92.4	94.1	94.5	94.5	94.1	93.6		
P.F. (%)	4.5	48.0	70.5	79.5	83.5	84.5	84.8	37.0	

Motor Speed Data

	LR	Pull-Up	BD	Rated	Idle
Speed (RPM)	0	600	1150	1188	1200
Current (Amps)	434	348	244	71.2	28.0
Torque (ft-lb)	646	545	844	332	0.00

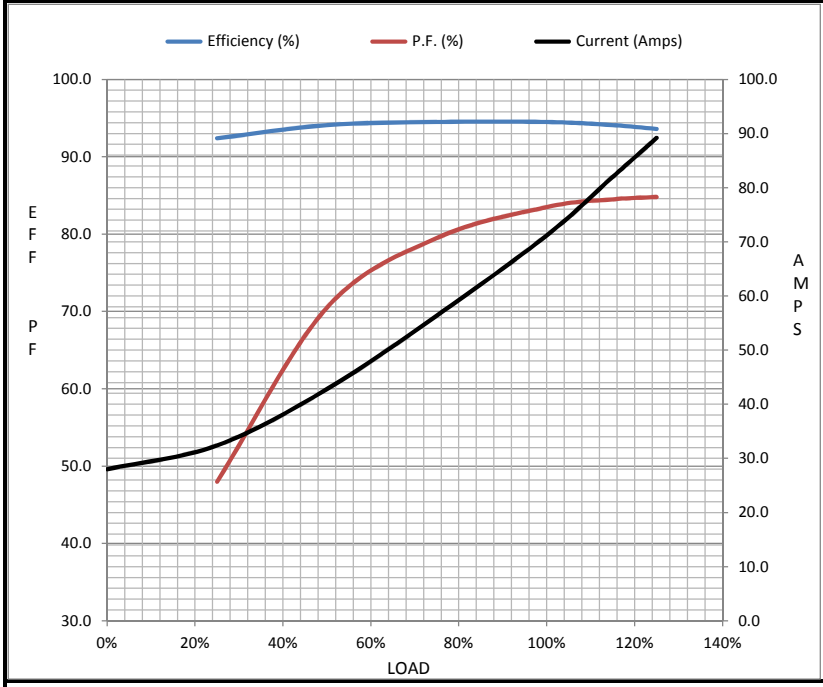

Information Block

HP	75.0
Sync. RPM	1200
Frame	405
Enclosure	TEFC
Construction	TFC
Voltage	575 V
Frequency	60 Hz
Design	B
LR Code letter	G
Service Factor	1.15
Temp Rise @ FL	65 ° C
Duty	CONT
Ambient	40 ° C
Elevation	1,000 feet
Rotor/Shaft wk²	50.0 Lb-Ft²
Ref Wdg	HE32506005 NONE
Sound Pressure @ 1M	68 dBA
VFD Rating	VARIABLE 10:1
Outline Dwg	SS557005
Conn. Diag	EE7300

Additional Specifications:

0

365THFS8036

EQUIV CKT (OHMS / PHASE)

R1	R2	X1	X2	Xm
0.0890	0.0440	0.3840	0.6910	11.8130

Speed -Torque Curve

