ABB BALDOR RELIANCE

Customer information packet

ECS101T3K3EC4

3KW, 1500RPM, 3PH, 50HZ, D112C, 3632B, TEFC, B1
Class - None
Division - Not Applicable

Copyright © All product information within this document is subject to ABB Motors and Mechanical Inc. copyright © protection, unless otherwise noted.
11/5/2026 12:25:53 PM

Specifications

Enclosure	TEFC
Frame	D112C
Frame Material	Steel
Frequency	50.00 Hz
Haz Area Class and Group	None
Haz Area Division	Not Applicable
Motor Letter Type	Brushless Wound Field PM Rotor
Output @ Frequency	3.000 KW @ 50 HZ
Phase	3
Synchronous Speed @ Frequency	1500 RPM @ 50 HZ
Voltage @ Frequency	380.0 V @ 50 HZ
Agency Approvals	BLUETOOTH
	CE
	CULUS
	WEEE
Ambient Temperature	40 °C
Auxiliary Box	NO AUXILLARY BOX
Auxiliary Box Lead Termination	None
Base Indicator	No Mounting
Bearing Grease Type	Polyrex EM (-20F +300F)
Blower	None
Constant Torque Speed Range	5
Current @ Voltage	5.300 A @ 380.0 V
Drip Cover	No Drip Cover
Duty Rating	S1
Efficiency @ 100% Load	92.4 %
Electrically Isolated Bearing	Not Electrically Isolated
Feedback Device	NO FEEDBACK
Frame Prefix	D
Heater Indicator	No Heater
High Voltage Full Load Amps	5.3 a
Insulation Class	F

Part Detail

Revision	E
Type	AC
Mech. spec.	
Base	
Status	PRD/A
Elec. spec.	36WGA0022
Layout	36LY-000-291
Eff. date	05-08-2024
CD Diagram	CD0006B03
Poles	04
Leads	3#12
Proprietary	False
Created date	05-25-2022

Inverter Code	Inverter Duty
Lifting Lugs	Standard Lifting Lugs
Locked Bearing Indicator	No Locked Bearing
Motor Lead Termination	Flying Leads
Motor Standards	IEC
Motor Type	3632B
Mounting Arrangement	B14
Number of Poles	4
Overall Length	16.05 IN
Power Factor	97
Product Family	General Purpose
Pulley Face Code	C-Face
Rodent Screen	None
Service Factor	1.00
Shaft Diameter	1.103 IN
Shaft Ground Indicator	Shaft Grounding
Shaft Rotation	Reversible
Speed	1500 rpm
Speed Code	Single Speed
Starting Method	Direct on line
Thermal Device - Bearing	None
Thermal Device - Winding	None
Vibration Sensor Indicator	No Vibration Sensor
Winding Thermal 1	None
Winding Thermal 2	None

Nameplate

NP3978A01							
PART NO.	ECIN4A9P5						
U1	400	**PH**	3	**HZ**	50		
I1	7.1	**W/EXT. CHOKE**			6.0		
SERIAL #							

NP3968B01A01							
CAT.NO.	ECS101T3K3EC4						
SPEC.	36-0000-3629			**YR**			
FRAME	D112C	**IP**	55	**WT.**	45		
KW	3	**HZ**	50	**PH**	3	**DUTY-IPM**	S1
INS CL	F	**CLASS RISE**		B	**AMB-C**	40	
EFF. CL	IE5	**EFF**	92.4	**COS0**	97		
VOLTS	380	**FLA**	5.3				
1/MIN	1500	**1/MIN MAX**		3000			
BEMF (V)	210	**RS (OHMS)**		3.3			
LD (MH)	54	**LQ (MH)**		191			
VPWM	**CP =**	50	**TO**	100			
CT	5	**TO**	50	**VT**	1	**TO**	50
MATCHED INV	ECIN4A9P5						
DE	6206	**ODE**	6205				
SERIAL #							

Volts	380	Max RPM	3000	Conn Diag.	CD0006B03	Leads	3
Amps	5.3	Max Amps		Cs Diagram	CS1126	BEMF	210
KW	3	VFD#	ECIN4A5P8			LD	54
RPM	1500	S.F.	1.00			LQ	191
Phase/Hz	3/50	Rating	40C AMB-S1			Rs	3.0984 Meas. L-L

60034-2-3 Motor Performance at Standardized Operating Points

	RPM	% Speed	LB-FT	% Torque	KW	Efficiency	Loss (% FL)	Watts Loss (W)
P1	1336	90%	14.1	100%	3.6	92.9	6.79%	204
P2	750	50%	14.1	100%	2.0	90.1	5.49%	165
P3	380	25%	14.1	100%	1.0	83.9	4.85%	146
P4	1350	90%	7.0	50%	1.8	93.3	3.26%	98
P5	750	50%	7.0	50%	1.0	91.3	2.40%	72
P6	750	50%	3.5	25%	0.5	91.2	1.22%	36
P7	378	25%	3.5	25%	0.3	87.7	0.88%	27

61800-9-2 PDS Performance at Reference Operating Points

	RPM	% Speed	LB-FT	% Torque	KW	System Efficiency	Loss (% FL)	Watts Loss (W)
P1	1508	100%	14.1	100%	4.0	90.2	10.89%	327
P2	750	50%	14.1	100%	2.0	86.8	7.63%	229
P3	255	17%	14.1	100%	0.7	72.0	6.59%	198
P4	1494	100%	7.0	50%	2.0	91.2	4.79%	144
P5	750	50%	7.0	50%	1.0	86.8	3.79%	114
P6	255	17%	7.0	50%	0.3	73.2	3.11%	93
P7	750	50%	3.5	25%	0.5	84.8	2.24%	67
P8	255	17%	3.5	25%	0.2	70.6	1.77%	53

Points not taken in certified order.

Volts	380	Max RPM	3000	Conn Diag.	CD0006B03	Leads	3
Amps	5.3	Max Amps		Cs Diagram	CS1126	BEMF	210
KW	3	VFD #	ECIN4A5P8			LD	54
RPM	1500	S.F.	1.00			LQ	191
Phase/Hz	3/50	Rating	40C AMB-S1			Rs	3.0984 Meas L-L

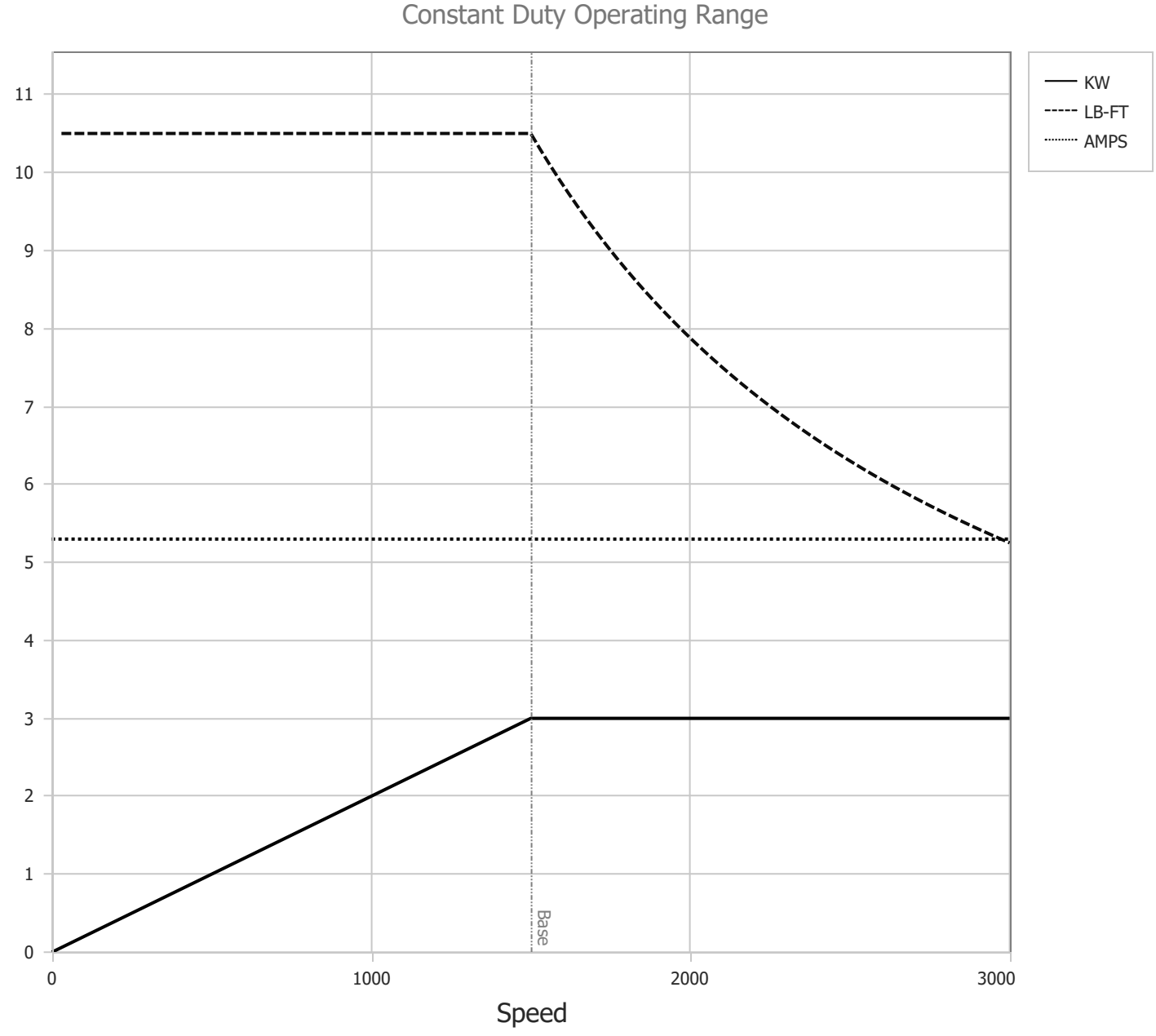

BALDOR • RELIANCE	DR By: R & D CK By: USTOSAN APP By: USJAROB1 Date: 01/09/2025	**AC MOTOR PERFORMANCE CURVES**	**36WGA0022** 36-0000-3639 *Test - 111783*

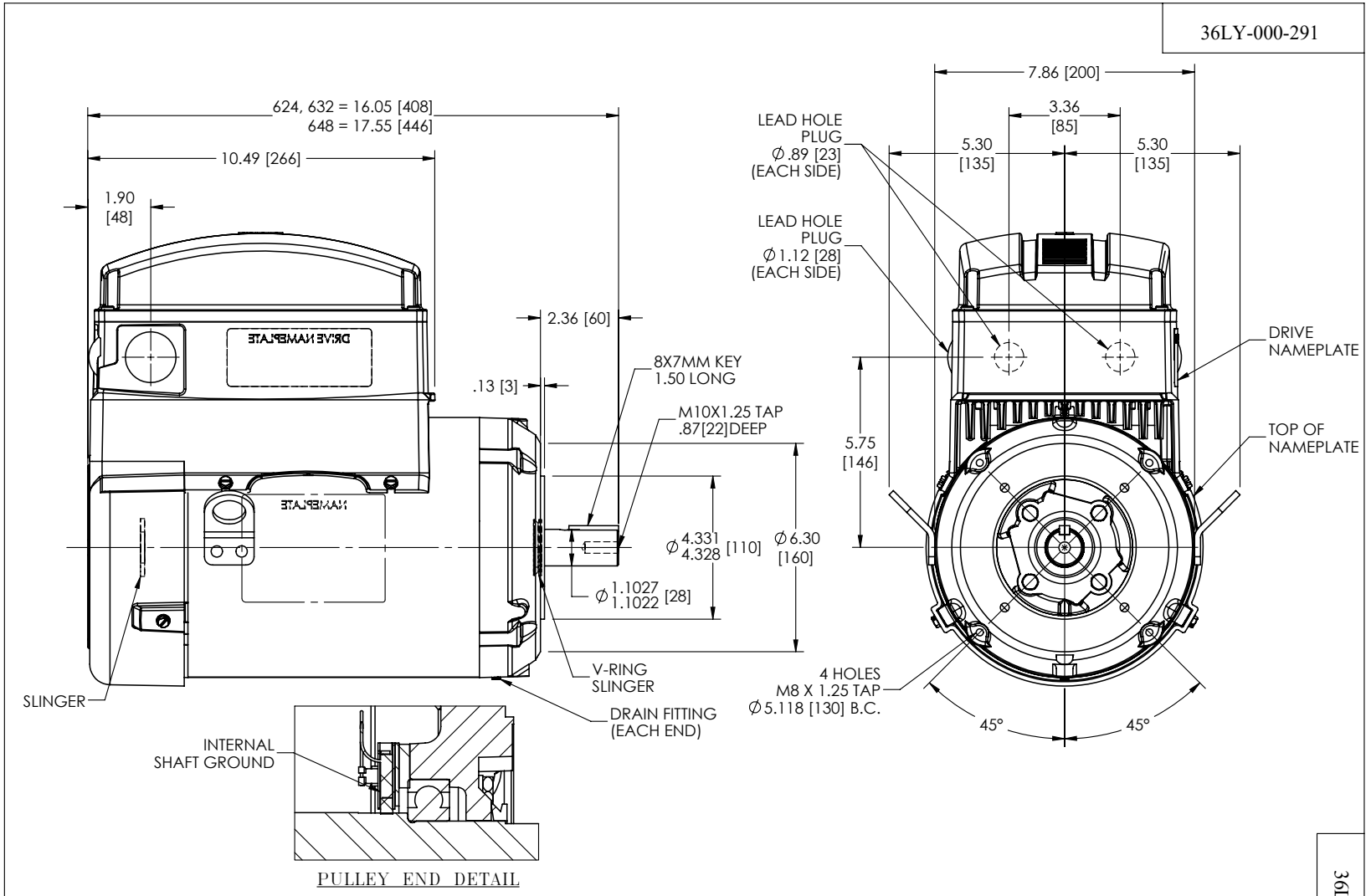
36LY-000-291
624, 632 = 16.05 [408]
648 = 17.55 [446]
10.49 [266]
1.90
[48]
2.36 [60]
.13 [3]
8X7MM KEY
1.50 LONG
M10X1.25 TAP
.87[22]DEEP
Ø 4.331
4.328 [110]
Ø 1.1027
1.1022 [28]
Ø6.30
[160]
V-RING
SLINGER
DRAIN FITTING
(EACH END)
SLINGER
INTERNAL
SHAFT GROUND
PULLEY END DETAIL
7.86 [200]
3.36
[85]
5.30
[135]
5.30
[135]
LEAD HOLE
PLUG
Ø .89 [23]
(EACH SIDE)
LEAD HOLE
PLUG
Ø 1.12 [28]
(EACH SIDE)
DRIVE
NAMEPLATE
TOP OF
NAMEPLATE
5.75
[146]
4 HOLES
M8 X 1.25 TAP
Ø 5.118 [130] B.C.
45°
45°
NOTE: ALTERNATE METRIC UNITS IN BRACKETS [mm]
CUSTOMER IS RESPONSIBLE FOR DETERMINING THAT THE PRODUCT WILL PERFORM SUITABLY IN THE INTENDED APPLICATION
REV. DESC: NEW
REV: - VERSION: 00 REVISED: 02:45:59 06/13/2022 TDR: 000001190317
BALDOR - RELIANCE®
MODEL NO. 36LY-000-291 REF: -
BY: USGRHUR
VER D112C B14 TEFC B INT SH GND ECS
36LY-000-291

36CB3503A00

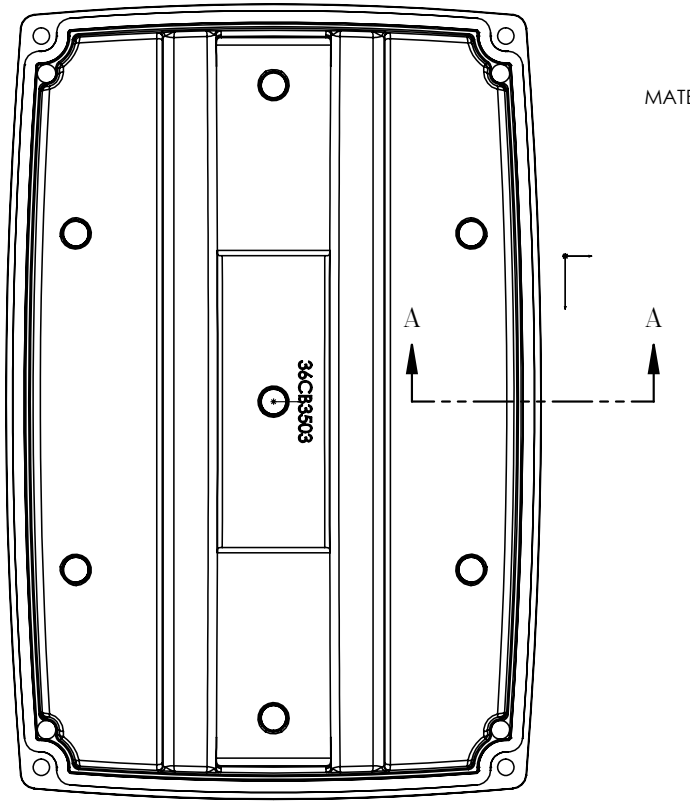

MATERIAL: RAMPF, RAKU-PUR 32-3280-51L

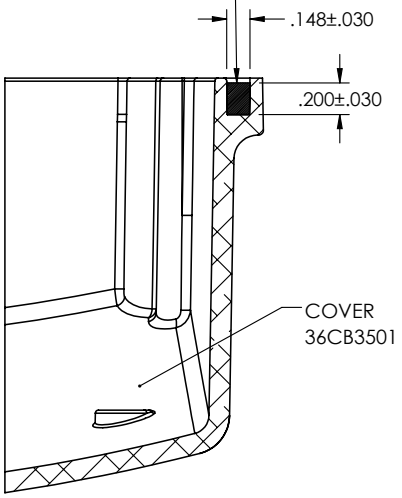

SECTION A–A

36CB3503A00

REV. DESC: NEW			
REV: -	VERSION: 00	REVISED: 09:13:16 01/15/2020	TDR: 000001129989
	MODEL NO. 36CB3503A00		REF: -
	BY: ENMARS0	Material: -	

BALDOR - RELIANCE®

36 & 37 FRAME TOP ECM ALUMINUM COVER WITH FOAM SEAL

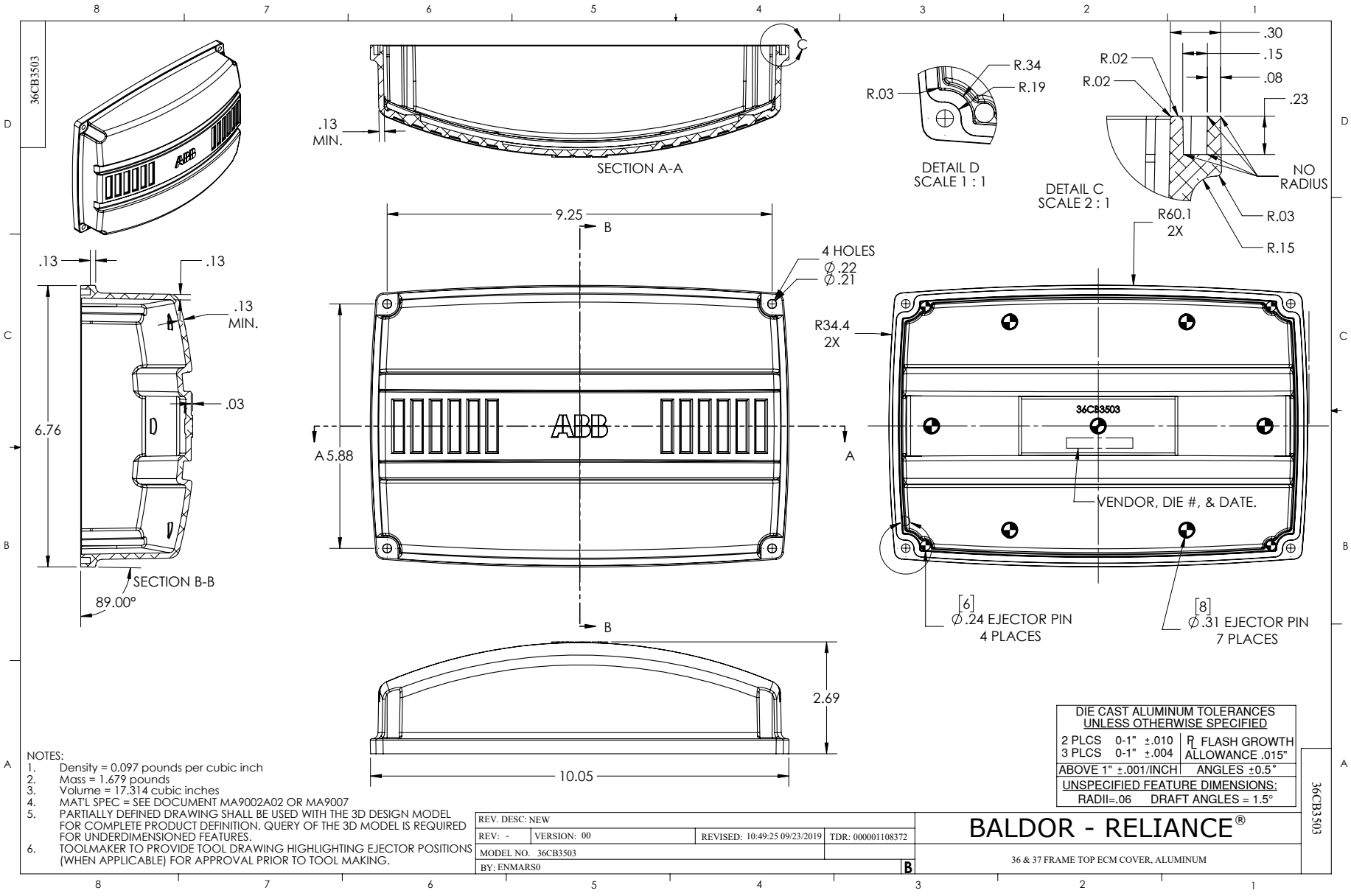

DIE CAST ALUMINUM TOLERANCES
UNLESS OTHERWISE SPECIFIED

2 PLCS	0-1" ±.010	R FLASH GROWTH
3 PLCS	0-1" ±.004	ALLOWANCE .015"
ABOVE 1" ±.001/INCH		ANGLES ±0.5°

UNSPECIFIED FEATURE DIMENSIONS:
RADII=.06 DRAFT ANGLES = 1.5°

NOTES:
1. Density = 0.097 pounds per cubic inch
2. Mass = 1.679 pounds
3. Volume = 17.314 cubic inches
4. MAT'L SPEC = SEE DOCUMENT MA9002A02 OR MA9007
5. PARTIALLY DEFINED DRAWING SHALL BE USED WITH THE 3D DESIGN MODEL FOR COMPLETE PRODUCT DEFINITION. QUERY OF THE 3D MODEL IS REQUIRED FOR UNDERDIMENSIONED FEATURES.
6. TOOLMAKER TO PROVIDE TOOL DRAWING HIGHLIGHTING EJECTOR POSITIONS (WHEN APPLICABLE) FOR APPROVAL PRIOR TO TOOL MAKING.

REV. DESC: NEW			
REV: -	VERSION: 00	REVISED: 10:49:25 09/23/2019	TDR: 000001108372
MODEL NO. 36CB3503			
BY: ENMARS0			B

BALDOR - RELIANCE®

36 & 37 FRAME TOP ECM COVER, ALUMINUM

36CB3503

CD0006B03

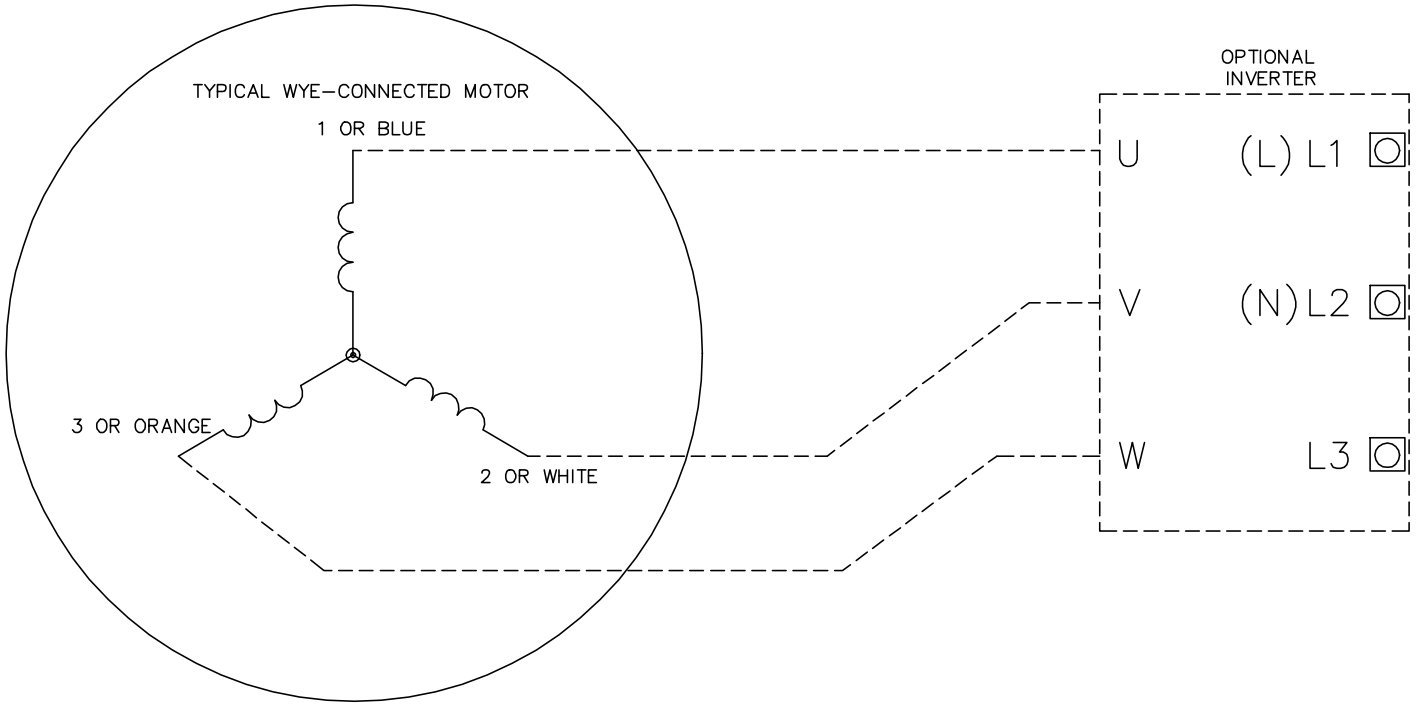

NOTES:

1. INTERCHANGE ANY TWO LINE LEADS TO REVERSE ROTATION.
2. ACTUAL NUMBER OF INTERNAL PARALLEL CIRCUITS MAY VARY.

CD0006B03

REV. DESC: CHANGE LEAD COLORS TO BLUE WHITE ORANGE		
REV. LTR: A	VERSION: 01	TDR: 000001158598
FILE: \AAA\00252\917	REVISED: 11:01:03 01/19/2021	BY: ENMARSO
MTL: –		

BALDOR - RELIANCE®

3PH, SV, 3 LEADS, WYE CONNECTED, ECS

SH 1 of 1

SP0032

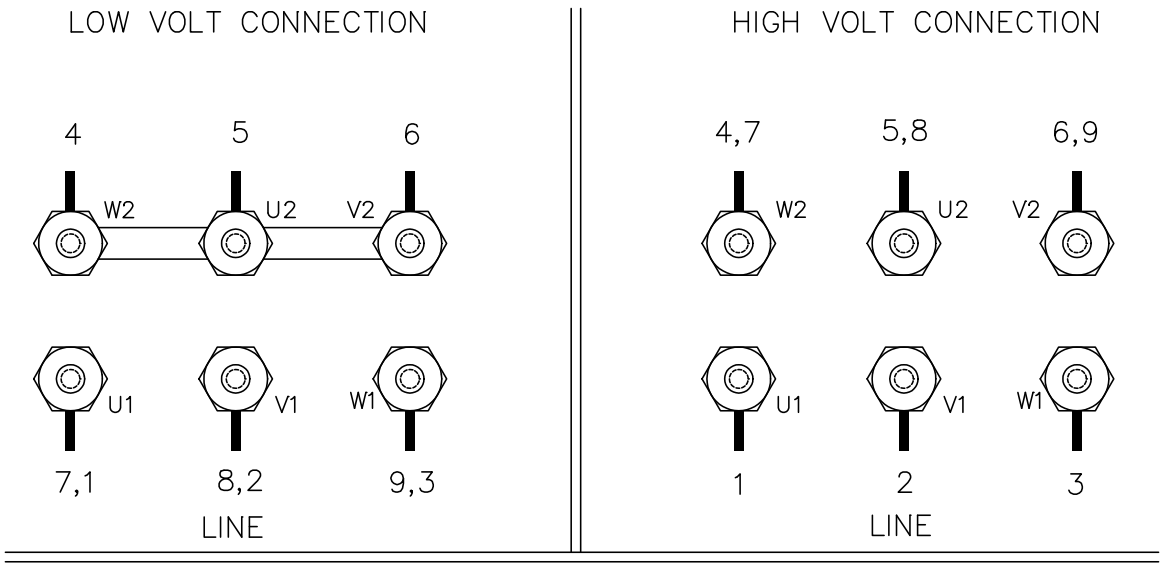

TO REVERSE ROTATION
INTERCHANGE ANY TWO
LINE LEADS.

MATL:				BALDOR ELECTRIC Co.
REV: A	ADD CONN LABEL REF TO DESC			
SP0032	SCALE: –	BY: JLP	REVISED: 12/17/96	THREE PHASE, DUAL VOLTAGE, TERMINAL BLOCK, CD0005/LC0005C01
	FILE: AAA00029378		TDR: 0111436	

SP0032