marathon®

General Purpose Motors

Model No: 182TTDB6026
Catalog No: GT0010

General Purpose Motor, 3 & 2 HP, 3 Ph, 60 & 50 Hz, 230/460 & 190/380 V, 1800 RPM, 182T Frame, DP

©2026 Marathon, All Rights Reserved.

marathon®

Product Information Packet: Model No: 182TTDB6026, Catalog No: GT0010 General Purpose Motor, 3 & 2 HP, 3 Ph, 60 & 50 Hz, 230/460 & 190/380 V, 1800 RPM, 182T Frame, DP

Nameplate Specifications

Phase	**3**	Output HP	**3 & 2 Hp**
Output KW	**2.2 & 1.5 kW**	Voltage	**230/460 & 190/380 V**
Speed	**1750 & 1460 r/min**	Synchronous RPM	**1800 & 1500 r/min**
Service Factor	**1.15 & 1.15**	Frame	**182T**
Enclosure	**Drip Proof**	Thermal Protection	**No Protection**
Efficiency	**89.5 & 88.5 %**	Ambient Temperature	**40 °C**
Frequency	**60 & 50 Hz**	Current	**7.8/3.9 & 6.6/3.3 A**
Power Factor	**81**	Duty	**Continuous**
Insulation Class	**F**	Design Code	**B**
KVA Code	**K**	Drive End Bearing Size	**6206**
Opp Drive End Bearing Size	**6203**	UL	**Recognized**
CSA	**Y**	CE	**Y**
IP Code	**22**	Number of Speeds	**1**

Technical Specifications

Electrical Type	**Squirrel Cage Inverter Rated**	Starting Method	**Line Or Inverter**
Poles	**4**	Rotation	**Reversible**
Resistance Main	**3.38 O**	Mounting	**Rigid Base**
Motor Orientation	**Horizontal**	Drive End Bearing	**Ball**
Opp Drive End Bearing	**Ball**	Frame Material	**Rolled Steel**
Shaft Type	**T**	Overall Length	**13.72 in**
Shaft Diameter	**1 1/8 in**	Shaft Extension	**2.75 in**
Assembly/Box Mounting	**F1 Only**	Inverter Load	**Constant 4:1**

Drawings

Connection Drawing	**EE7308**	Outline Drawing	**SS620292-182T**

This is an uncontrolled document once printed or downloaded and is subject to change without notice. Date Created: 16/10/2026

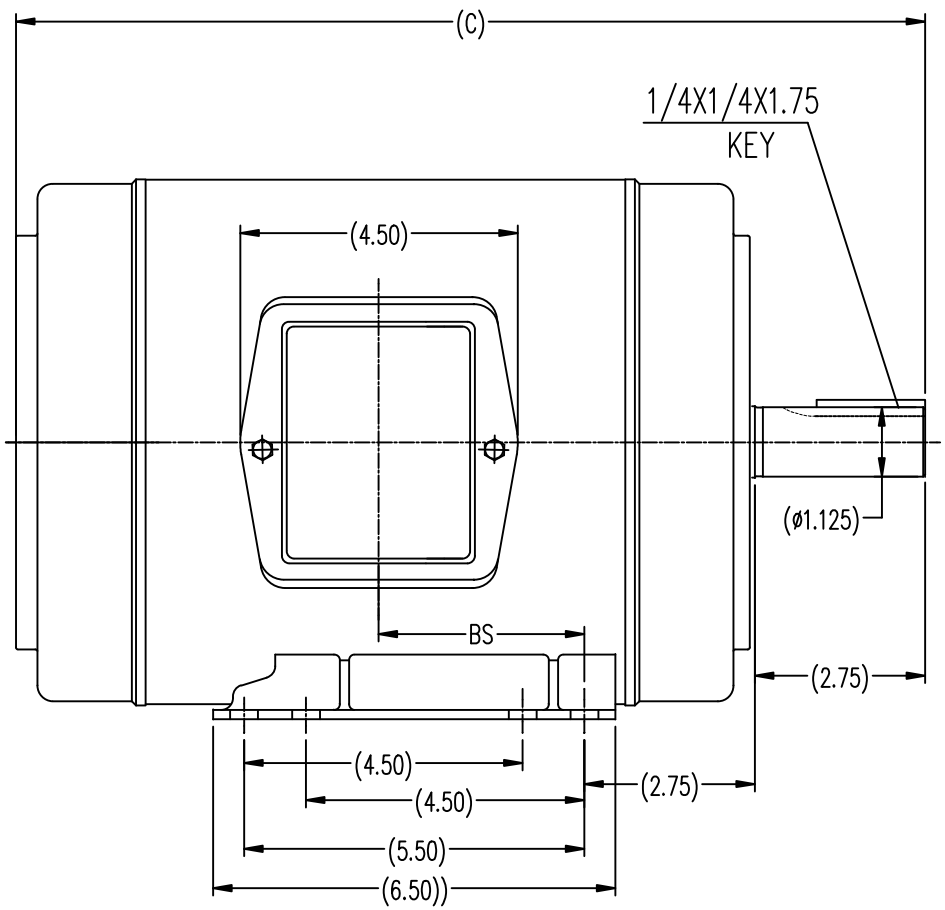

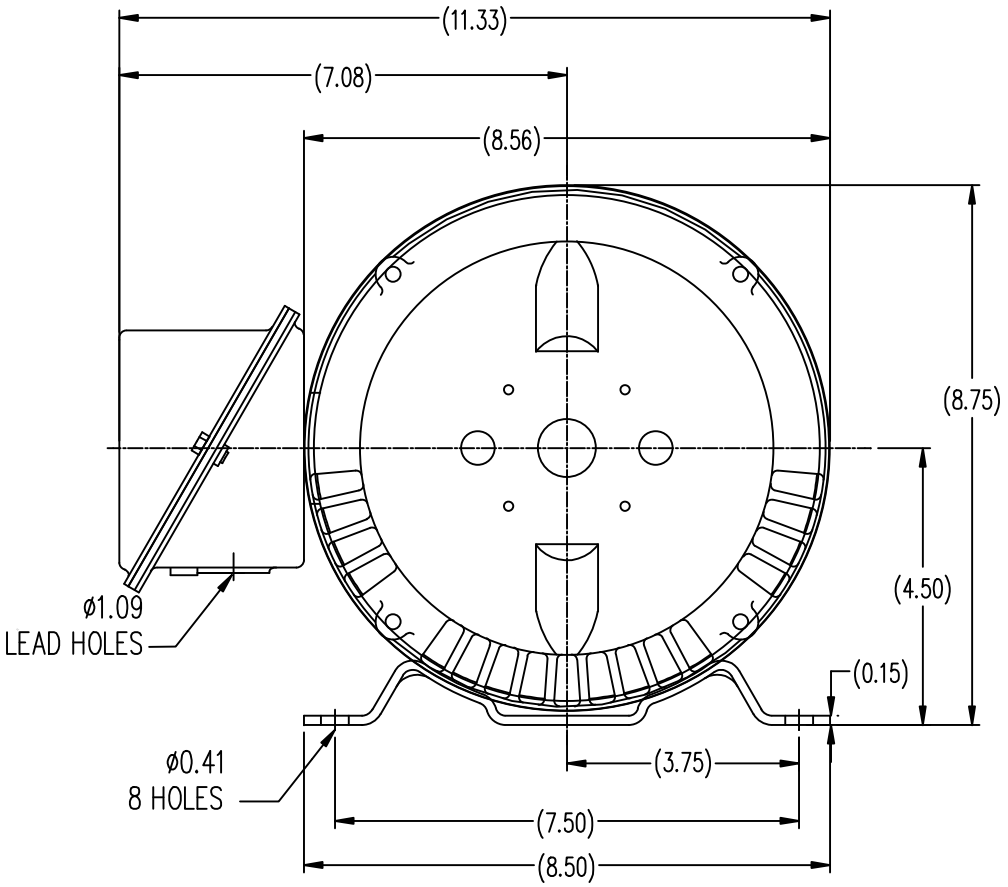

182T	13.72	2.75
184T	14.72	3.25
FRAME	C	BS

				TOLERANCES UNLESS SPECIFIED		REGAL-BELOIT CORPORATION	DRAWN ZYH 03-05-2010
				DEC.	INCHES		CHK HZJ 03-05-2010
				.X	±.1		APPD CL 03-05-2010
				.XX	±.03	TITLE OUTLINE	SCALE 1=2
				.XXX	±.005	182/184T FR ODP-ROLL STEEL	REF
1	CORRECTED DIMENSIONS	MOL 8/30/2011		.XXXX	±.0005	MAT'L.	FMF HWADA
NO.	REVISION	BY & DATE	CHK	ANG	±1/2-	FINISH	PREV

THIS DRAWING IN DESIGN AND DETAIL IS OUR PROPERTY AND MUST NOT BE USED EXCEPT IN CONNECTION WITH OUR WORK ALL RIGHTS OF DESIGN AND INVENTION ARE RESERVED
THIS IS AN ELECTRONICALLY GENERATED DOCUMENT – DO NOT SCALE THIS PRINT

RFP	CAD FILE SS620292	SIZE	DRAWING NO.	REV.
DIST		B	SS620292	1

Uncontrolled Copy

THREE PHASE
DUAL VOLTAGE MOTOR

HIGH VOLTAGE

(U1) T1 — L1
(V1) T2 — L2
(W1) T3 — L3
(U2) T4
(U3) T7
(V2) T5
(V3) T8
(W2) T6
(W3) T9

LOW VOLTAGE

(U1) T1
(U3) T7 — L1
(V1) T2
(V3) T8 — L2
(W1) T3
(W3) T9 — L3
(U2) T4
(V2) T5
(W2) T6

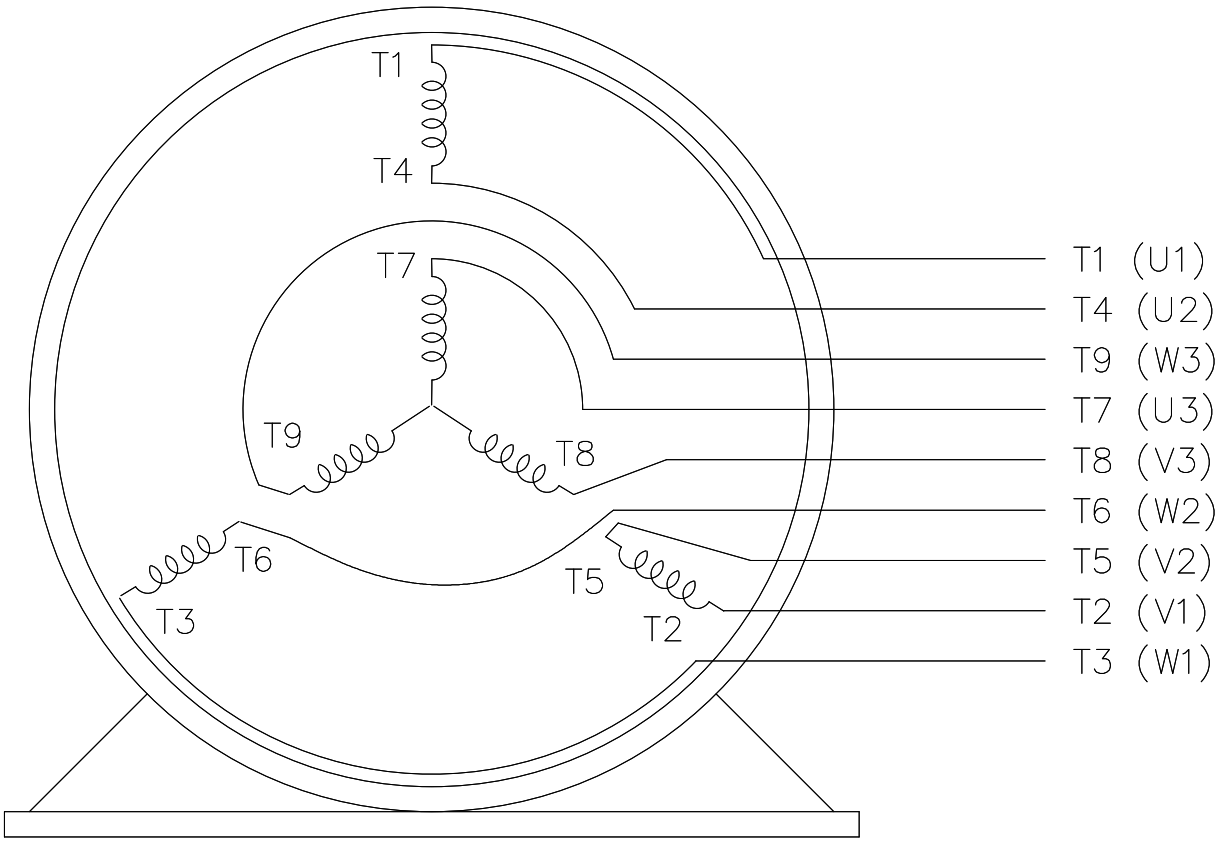

VIEW OF TERMINAL END

REF.
WINDING DIAGRAM

T8Y, T2Y, T2BL, T4BX, T2EC, T2G
T6BZ, T2B, T6BL, T4AV, T6B, T4B

OPTIONAL CORD CONNECTION

L1 — WHITE
L2 — RED
L3 — BLACK

DRAWING REVISION	REVISION BY	REV DATE/ © DATE
J	SB	08/01/2025
REQUEST NUMBER	APPROVED BY	DATE
CR-0023654	SBD	08/01/2025

REQUEST NUMBER DESCRIPTION
DRAWING TITLE BLOCK UPDATED

COPYRIGHT (PER REVISION DATE) MARATHON ELECTRIC, LLC. ALL RIGHTS RESERVED. PROPRIETARY AND CONFIDENTIAL INFORMATION - THIS DOCUMENT IS THE PROPERTY OF MARATHON ELECTRIC, LLC. ("OWNER") AND CONTAINS OWNER'S PROPRIETARY INFORMATION. ANY PERSON, CORPORATION OR OTHER FIRM RECEIVING IT IS DEEMED, BY RECEIVING IT, TO AGREE THAT IT, AND/OR ANY PART OF IT, SHALL NOT BE DISCLOSED TO ANY PERSON, CORPORATION OR OTHER ENTITY, DUPLICATED, AND/OR USED, EXCEPT AS EXPRESSLY APPROVED IN WRITING IN ADVANCE BY OWNER. THIS DOCUMENT SHALL BE RETURNED TO OWNER UPON REQUEST. IT MAY BE SUBJECT TO CERTAIN RESTRICTIONS UNDER APPLICABLE EXPORT CONTROL LAWS AND REGULATIONS.

PRIMARY DIMENSIONS ARE INCH
mm DIMENSIONS IN [BRACKETS]
ARE FOR REFERENCE ONLY

DRAWN BY	RM
DATE	11/20/1990
APPROVED BY	SAS
DATE	04/24/2003
REFERENCE	
THIRD ANGLE PROJECTION	

marathon™

DESCRIPTION
CONN DIAGRAM-EXTERNAL
3Ø - DUAL VOLTAGE MOTOR

MATERIAL	PROCESS/FINISH

SIZE	DRAWING NUMBER	SHEET
A	4 of 6 EE7308	1 OF 1

Uncontrolled Copy

Data Sheet

Date: 16-06-2017
Customer:
Attention:
Submitted by: FAREEDA DUDEKULA

marathon® electric

182TTDB6026

Submittal

Data @ 460 V

Motor Load Data

Load	0%	25%	50%	75%	100%	115%	125%	LR	
Current (Amps)	1.80	2.00	2.50	3.1	3.9	4.3	4.6	35.0	
Torque (ft-lb)	0.00	2.20	4.4	6.7	9.0	10.3	11.3	25.0	
RPM	1800	1790	1780	1770	1750	1,745	1740	0	
Efficiency (%)		84.0	89.5	90.2	89.5	89.5	89.5		
P.F. (%)	6.5	42.0	63.5	75.5	81.0	83.0	84.5	53.5	

Motor Speed Data

	LR	Pull-Up	BD	Rated	Idle
Speed (RPM)	0	750	1360	1750	1800
Current (Amps)	35.0	31.5	24.0	3.9	1.80
Torque (ft-lb)	25.0	22.5	37.0	9.0	0.00

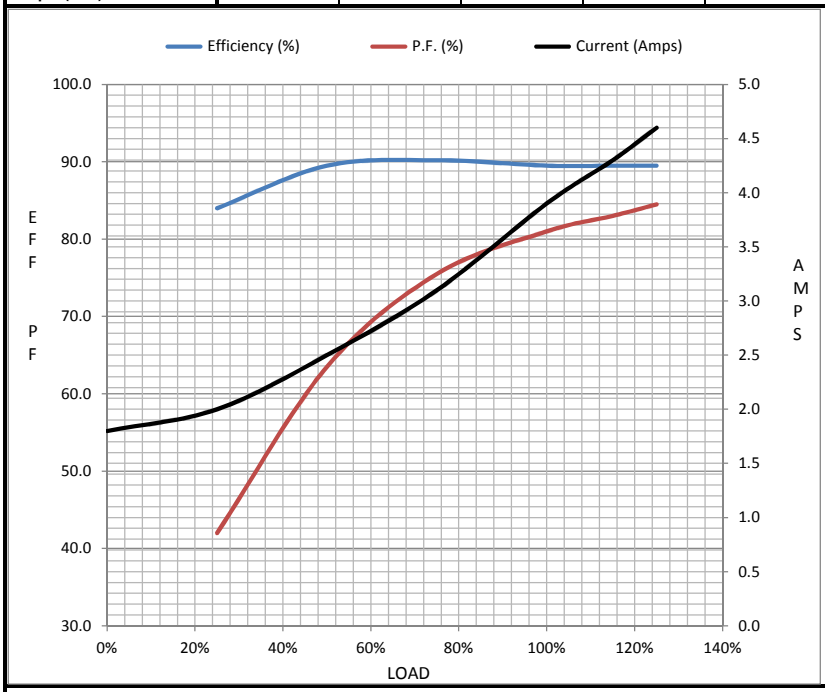

Information Block

HP	3.0
Sync. RPM	1800
Frame	182
Enclosure	DP
Construction	TDB
Voltage	230/460#190/38(V
Frequency	60 Hz
Design	A
LR Code letter	K
Service Factor	1.15
Temp Rise @ FL	35 ° C
Duty	CONT
Ambient	40 ° C
Elevation	1,000 feet
Rotor/Shaft wk²	0.40 Lb-Ft²
Ref Wdg	CHT18240008 NONE
Sound Pressure @ 1M	67 dBA
VFD Rating	CONSTANT 4:1
Outline Dwg	SS620292
Conn. Diag	EE7308

Additional Specifications:

0

365THFS8036

EQUIV CKT (OHMS / PHASE)

R1	R2	X1	X2	Xm
1.9870	2.1760	5.3920	5.3920	141.9000

Speed -Torque Curve

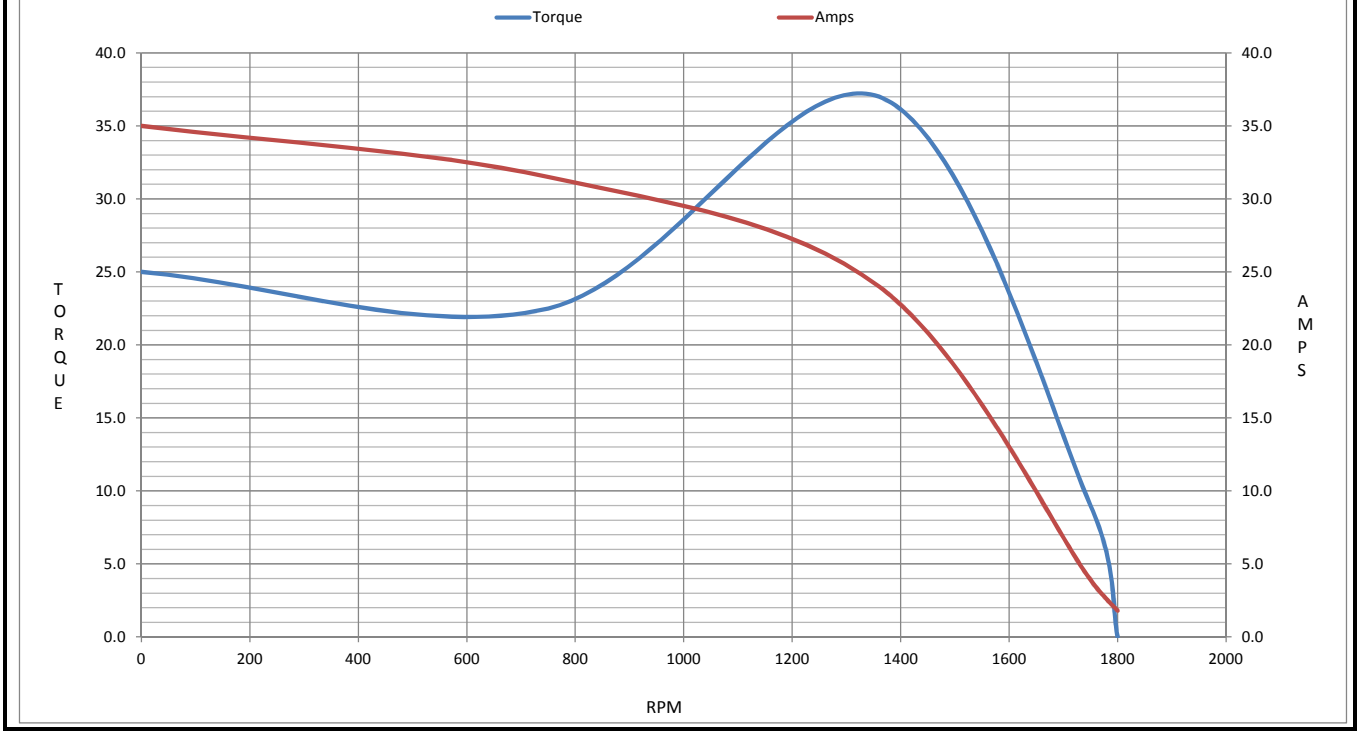

Uncontrolled Copy

CERTIFICATION DATA SHEET

Model#:	182TTDB6026 BB	**WINDING#:**	CHT18240008 NONE 1
CONN. DIAGRAM:	EE7308	**ASSEMBLY:**	F1 ONLY
OUTLINE:	SS620292		

TYPICAL MOTOR PERFORMANCE DATA

HP	KW	SYNC. RPM	F.L. RPM	FRAME	ENCLOSURE	KVA CODE	DESIGN
3&2	2.24&1.49	1800	1750&1460	182T	DP	K	B

PH	Hz	VOLTS	FL AMPS	START TYPE	DUTY	INSL	S.F	AMB°C	ELEVATION
3	60/50	230/460#190/380	7.8/3.9&6.6/3.3	LINE OR INVERTER	CONTINUOUS	F7	1.15/1.15	40	3300

FULL LOAD EFF: 89.5&88.5	3/4 LOAD EFF: 90.2	1/2 LOAD EFF: 89.5	GTD. EFF	ELEC. TYPE	NO LOAD AMPS
FULL LOAD PF: 81&78	3/4 LOAD PF: 75.5	1/2 LOAD PF: 63.5	88.5	SQ CAGE INV RATED	3.6 / 1.8

F.L. TORQUE	LOCKED ROTOR AMPS	L.R. TORQUE	B.D. TORQUE	F.L. RISE°C
9 LB-FT	70 / 35	25 LB-FT 277	37 LB-FT 411	35

SOUND PRESSURE @ 3 FT.	SOUND POWER	ROTOR WK^2	MAX. WK^2	SAFE STALL TIME	STARTS /HOUR	APPROX. MOTOR WGT
67 dBA	77 dBA	0.4 LB-FT^2	20 LB-FT^2	20 SEC.	2	80 LBS.

*** SUPPLEMENTAL INFORMATION ***

DE BRACKET TYPE	ODE BRACKET TYPE	MOUNT TYPE	ORIENTATION	SEVERE DUTY	HAZARDOUS LOCATION	DRIP COVER	SCREENS	PAINT
STANDARD	STANDARD	RIGID	HORIZONTAL	FALSE	NONE	FALSE	NONE	BLUE (ENAMEL)

BEARINGS		GREASE	SHAFT TYPE	SPECIAL DE	SPECIAL ODE	SHAFT MATERIAL	FRAME MATERIAL
DE	OPE						
BALL 6206	BALL 6203	POLYREX EM	T	NONE	NONE	1045 HOT ROLLED (C-204)	ROLLED STEEL

THERMO-PROTECTORS				THERMISTORS	CONTROL	SPACE /n HEATERS
THERMOSTATS	PROTECTORS	WDG RTDs	BRG RTDs			
NONE	NOT	NONE	NONE	NONE	FALSE	NONE VOLTS

If Inverter equals NONE, contact factory for further information

INVERTER TORQUE: CONSTANT 4:1
INV. HP SPEED RANGE: NONE

ENCODER: NONE
NONE NONE
NONE NONE PPR

BRAKE: NONE NONE
NONE P/N NONE
NONE NONE
NONE FT-LB NONE V NONE Hz

*
N
O
T
E
S
*

DATE: 06/27/2017 01:29:29 AM
FORM 3531 REV.3 02/07/99
** Subject to change without notice.