ASSEMBLY TEMPLATE

ADA INSTRUCTOR DESK

1214K-L-ADA, 1214K-R-ADA, 1216K-L-ADA & 1216K-R-ADA SERIES
ASSEMBLY INSTRUCTIONS

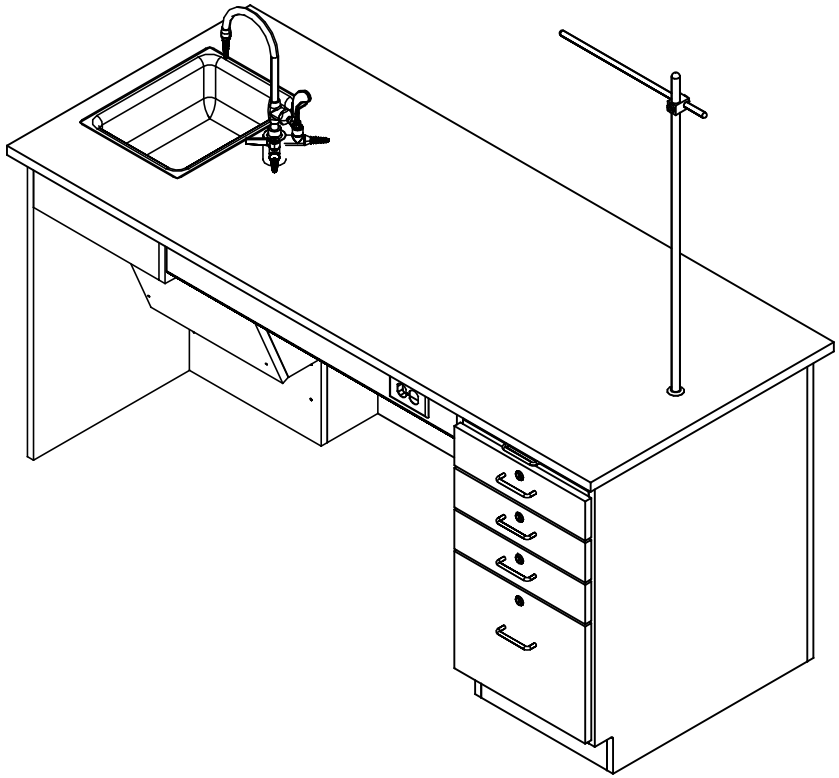

NOTE:

1. MODEL VIEWS MAY NOT REPRESENT EXACT MODEL PURCHASED

REV.	DESCRIPTION	DATE	NAME	ECN NO.
A	CREATED DRAWING	11/14/16	EMR	-

REVISION LEVEL

ALL DIMENSIONS ARE IN INCHES UNLESS NOTED OTHERWISE
DECIMALS: .X = ± .030
.XX = ± .020
.XXX = ± .010
ANGLES: = ± 1°0'
CABINET SQUARENESS = ± .0625

DWN BY:	EMR	DATE DWN:	11/14/16
APR BY:		DATE APR:	
APR BY:		DATE APR:	

CONFIDENTIAL:
ALL DESIGN RIGHTS RESERVED
THE INFORMATION, DATA, DESIGN, AND DRAWINGS EMBODIED IN THIS DOCUMENT AND ALL REPRODUCTIONS THEREOF ARE THE EXCLUSIVE PROPERTY OF DIVERSIFIED WOODCRAFTS, INC.

THESE DOCUMENTS ARE SUPPLIED WITH THE UNDERSTANDING THAT THEY WILL NOT BE DISCLOSED TO THIRD PARTIES WITHOUT WRITTEN CONSENT OF DIVERSIFIED WOODCRAFTS, INC. ANY REPRODUCTION IN PART OR WHOLE WITHOUT WRITTEN CONSENT IS SUBJECT TO LEGAL ACTION.

DIVERSIFIED SPACES™
300 South Krueger Street
Suring, WI 54174
diversifiedwoodcrafts.com

TITLE:
ADA INSTRUCTOR DESK
ASSEMBLY INSTRUCTIONS

DRAWING NUMBER:	SCALE:	SHEET:	REVISION:
ADA INSTRUCTOR DESK	NTS	1 OF 14	REV A

ASSEMBLY TEMPLATE

TOOLS REQUIRED
CONTACT CEMENT
SCREW DRIVER
C-CLAMPS
SHIM STOCK (IF NEEDED)

ASSEMBLY COMPONENTS

ITEMS INCLUDED	PART #	PART DESCRIPTION	QTY
TOP	VARIES	TOP, (STYLE VARIES), 1.00X30X72,BLK,FIXT	1
CABINET	N/A	INSTR82L OR INSTR82R - 17"W X 32.50"H X 26.25"D	1
CABINET	N/A	B26 - 17"W X 32.50"H X 26.25"D	1
BACK PANEL	N/A	70"W X 32.50"H X 0.75"D	1
APRON	N/A	0.81"THK X 4.50"W X 36"L	1
SCREWS - BACK PANEL	100478	SCREW,#8X1 ¼ SQ. WASHER FLAT HEAD	12
L BRACKET	100355	BRACKET, RAIL 1.25X1.25X4.25	2
SCREWS - L BRACKET	100649	SCREW,#8X¾ PHIL TRUSS HEAD SMS	8
SILICONE	100711	SILICONE,SEALANT,CLEAR	1
RUBBER BASE MOLDING	100283	RUBBER BASE MOLDING (SOLD BY FOOT)	20
STAINLESS STEEL CORNERS	100057	CORNER-STAINLESS STEEL, BASE	10
SCREWS - BASE	100064	SCREW,#6X½ PTH SMS SS SCREW	40
ELECTRICAL BOX	100033	ELECTRICAL BOX 3.00X2X2.5 DEEP	1
ELECTRICAL OUTLET	100034	ELEC,OUTLET,GFI,20A 125V, BLK	1
FIXTURE - FAUCET	223575	FIXTURE,L65-DIV-BH-WSA(MULTI-SERVICE)	1
FIXTURE - SINK	100693	SINK,EPOXY LADA 5,BLK	1
FIXTURE - SINK TRAP	100056	SINK TRAP,PLASTIC ADJUSTABLE	1
FIXTURE - SINK STOPPER	100112	SINK STOPPER 1 ½,BLK	1
FIXTURE - STRAINER	100055	SINK,OUTLET/STRAINER EPOXY,BLK	1

NOTE:

1. TOPS ARE EITHER PHENOLIC OR EPOXY.
2. CABINETS VARY WITH STYLE OF INSTRUCTOR'S DESK PURCHASED.
   2.1. EX. 1210K-L-ADA OR 1210K-R-ADA

REV.	DESCRIPTION	DATE	NAME	ECN NO.
A	CREATED DRAWING	11/14/16	EMR	-

REVISION LEVEL

ALL DIMENSIONS ARE IN INCHES UNLESS NOTED OTHERWISE
DECIMALS: .X = ± .030
.XX = ± .020
.XXX = ± .010
ANGLES: = ± 1°0'
CABINET SQUARENESS = ± .0625

DWN BY:	EMR	DATE DWN:	11/14/16
APR BY:		DATE APR:	
APR BY:		DATE APR:	

CONFIDENTIAL:
ALL DESIGN RIGHTS RESERVED
THE INFORMATION, DATA, DESIGN, AND DRAWINGS EMBODIED IN THIS DOCUMENT AND ALL REPRODUCTIONS THEREOF ARE THE EXCLUSIVE PROPERTY OF DIVERSIFIED WOODCRAFTS, INC.

THESE DOCUMENTS ARE SUPPLIED WITH THE UNDERSTANDING THAT THEY WILL NOT BE DISCLOSED TO THIRD PARTIES WITHOUT WRITTEN CONSENT OF DIVERSIFIED WOODCRAFTS, INC. ANY REPRODUCTION IN PART OR WHOLE WITHOUT WRITTEN CONSENT IS SUBJECT TO LEGAL ACTION.

DIVERSIFIED SPACES™
300 South Krueger Street
Suring, WI 54174
diversifiedwoodcrafts.com

TITLE:
ADA INSTRUCTOR DESK
TOOLS AND ASSEMBLY COMPONENTS

DRAWING NUMBER:	SCALE:	SHEET:	REVISION:
ADA INSTRUCTOR DESK	NTS	2 OF 14	REV A

ASSEMBLY TEMPLATE

ASSEMBLY COMPONENTS

ITEMS INCLUDED	PART #	PART DESCRIPTION	QTY
ROD SOCKET	206505	ROD SOCKET ASSY,SOCKET,WASHER,NUT	2
CROSSBAR	100005	ROD,CROSSBAR ¾ DIA.X18 L	1
UPRIGHT	100004	ROD,UPRIGHT ¾ DIA.X36 L	2
CLAMP	100002	ROD CLAMP ¾ X ¾ ASSY	2

NOTE:

1. TOPS ARE EITHER PHENOLIC OR EPOXY.
2. CABINETS VARY WITH STYLE OF INSTRUCTOR'S DESK PURCHASED.
   2.1. EX. 1210K-L-ADA OR 1210K-R-ADA

REV.	DESCRIPTION	DATE	NAME	ECN NO.
A	CREATED DRAWING	11/14/16	EMR	-

REVISION LEVEL

ALL DIMENSIONS ARE IN INCHES UNLESS NOTED OTHERWISE
DECIMALS: .X = ± .030
.XX = ± .020
.XXX = ± .010
ANGLES: = ± 1°0'
CABINET SQUARENESS = ± .0625

DWN BY:	EMR	DATE DWN:	11/14/16
APR BY:		DATE APR:	
APR BY:		DATE APR:	

CONFIDENTIAL:
ALL DESIGN RIGHTS RESERVED
THE INFORMATION, DATA, DESIGN, AND DRAWINGS EMBODIED IN THIS DOCUMENT AND ALL REPRODUCTIONS THEREOF ARE THE EXCLUSIVE PROPERTY OF DIVERSIFIED WOODCRAFTS, INC.

THESE DOCUMENTS ARE SUPPLIED WITH THE UNDERSTANDING THAT THEY WILL NOT BE DISCLOSED TO THIRD PARTIES WITHOUT WRITTEN CONSENT OF DIVERSIFIED WOODCRAFTS, INC. ANY REPRODUCTION IN PART OR WHOLE WITHOUT WRITTEN CONSENT IS SUBJECT TO LEGAL ACTION.

DIVERSIFIED SPACES™
300 South Krueger Street
Suring, WI 54174
diversifiedwoodcrafts.com

TITLE:
ADA INSTRUCTOR DESK
TOOLS AND ASSEMBLY COMPONENTS

DRAWING NUMBER:	SCALE:	SHEET:	REVISION:
ADA INSTRUCTOR DESK	NTS	3 OF 14	REV A

ASSEMBLY TEMPLATE

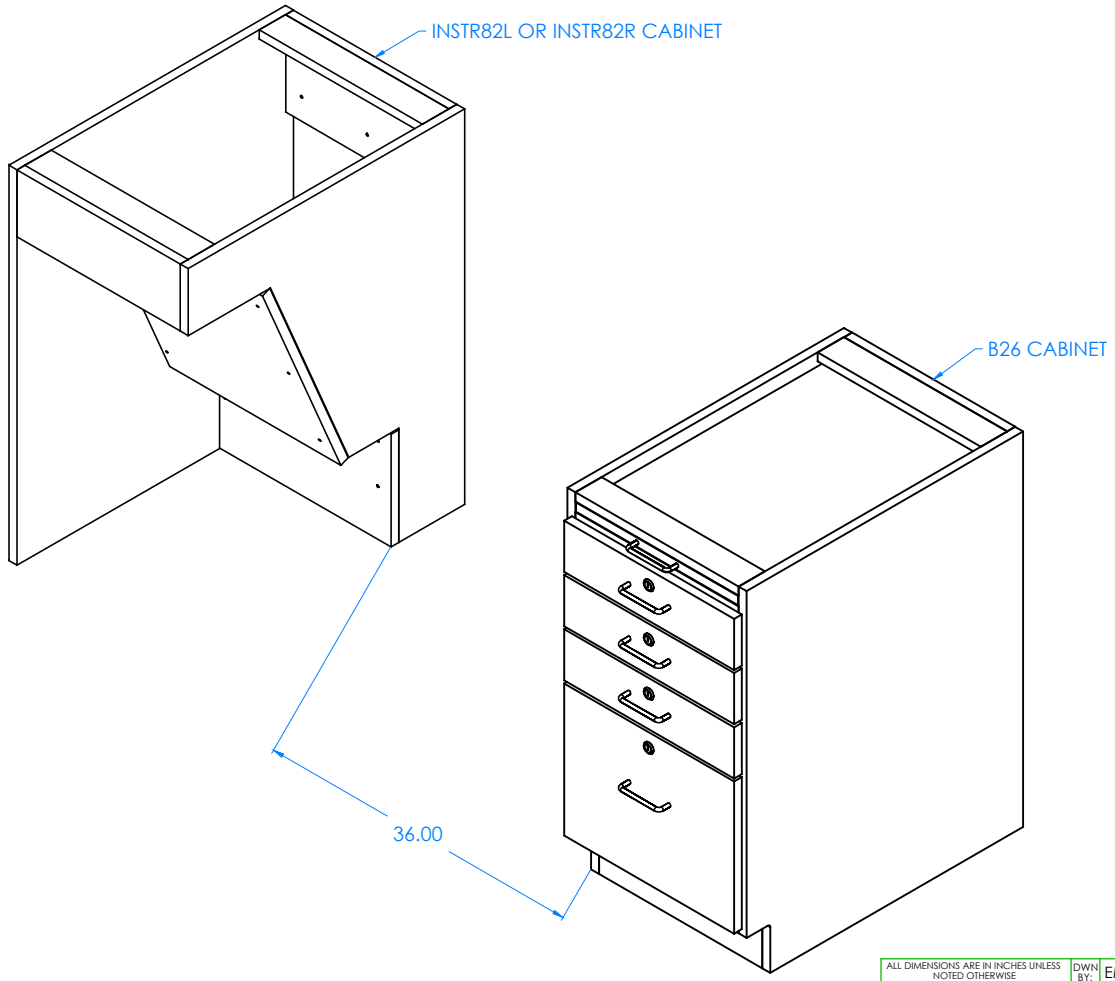

STEP 1:

- POSITION THE TWO CABINETS IN DESIRED LOCATION.
- PLACE ADA CABINET OVER UTILITY HOOKUPS.
- LEAVE ENOUGH ROOM IN BETWEEN CABINETS FOR APRON.
- LEVEL CABINETS.
- ATTACH TO FLOOR.

NOTE:

1.

REV.	DESCRIPTION	DATE	NAME	ECN NO.
A	CREATED DRAWING	11/14/16	EMR	-

REVISION LEVEL

ALL DIMENSIONS ARE IN INCHES UNLESS NOTED OTHERWISE
DECIMALS: .X = ± .030
.XX = ± .020
.XXX = ± .010
ANGLES: = ± 1°0'
CABINET SQUARENESS = ± .0625

DWN BY:	EMR	DATE DWN:	11/14/16
APR BY:		DATE APR:	
APR BY:		DATE APR:	

CONFIDENTIAL:
ALL DESIGN RIGHTS RESERVED
THE INFORMATION, DATA, DESIGN, AND DRAWINGS EMBODIED IN THIS DOCUMENT AND ALL REPRODUCTIONS THEREOF ARE THE EXCLUSIVE PROPERTY OF DIVERSIFIED WOODCRAFTS, INC.

THESE DOCUMENTS ARE SUPPLIED WITH THE UNDERSTANDING THAT THEY WILL NOT BE DISCLOSED TO THIRD PARTIES WITHOUT WRITTEN CONSENT OF DIVERSIFIED WOODCRAFTS, INC. ANY REPRODUCTION IN PART OR WHOLE WITHOUT WRITTEN CONSENT IS SUBJECT TO LEGAL ACTION.

DIVERSIFIED SPACES™
300 South Krueger Street
Suring, WI 54174
diversifiedwoodcrafts.com

TITLE:
ADA INSTRUCTOR DESK
ASSEMBLY INSTRUCTIONS

DRAWING NUMBER:	SCALE:	SHEET:	REVISION:
ADA INSTRUCTOR DESK	NTS	4 OF 13	REV A

ASSEMBLY TEMPLATE

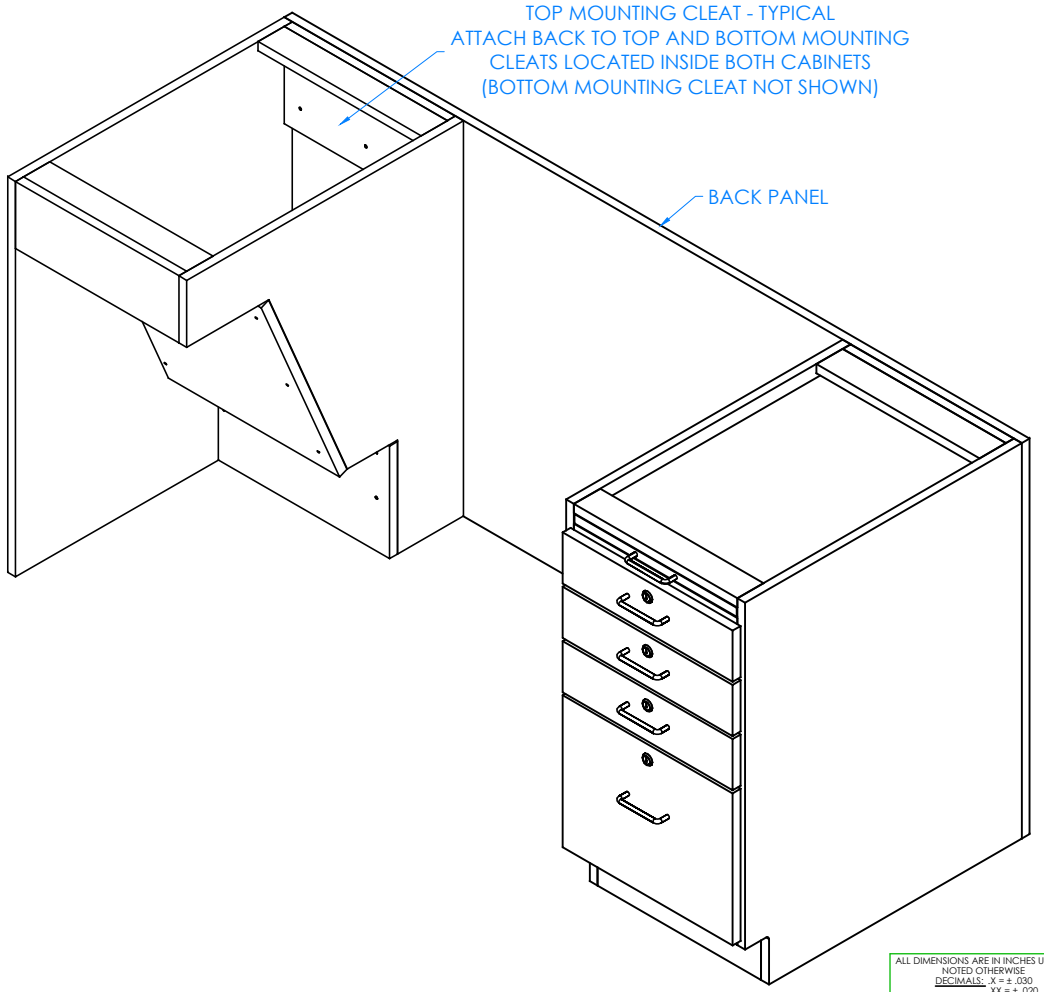

STEP 2:

- ATTACH BACK PANEL TO BACK OF CABINETS WITH HARDWARE PROVIDED.
- SCREW INTO TOP AND BOTTOM MOUNTING CLEATS LOCATED INSIDE BOTH CABINETS.
- MAKE SURE BACK PANEL IS FLUSH WITH OUTSIDE EDGES OF CABINETS.

NOTE:

1.

REV.	DESCRIPTION	DATE	NAME	ECN NO.
A	CREATED DRAWING	11/14/16	EMR	-

REVISION LEVEL

ALL DIMENSIONS ARE IN INCHES UNLESS NOTED OTHERWISE
DECIMALS: .X = ± .030
.XX = ± .020
.XXX = ± .010
ANGLES: = ± 1°0'
CABINET SQUARENESS = ± .0625

DWN BY:	EMR	DATE DWN:	11/14/16
APR BY:		DATE APR:	
APR BY:		DATE APR:	

CONFIDENTIAL:
ALL DESIGN RIGHTS RESERVED
THE INFORMATION, DATA, DESIGN, AND DRAWINGS EMBODIED IN THIS DOCUMENT AND ALL REPRODUCTIONS THEREOF ARE THE EXCLUSIVE PROPERTY OF DIVERSIFIED WOODCRAFTS, INC.

THESE DOCUMENTS ARE SUPPLIED WITH THE UNDERSTANDING THAT THEY WILL NOT BE DISCLOSED TO THIRD PARTIES WITHOUT WRITTEN CONSENT OF DIVERSIFIED WOODCRAFTS, INC. ANY REPRODUCTION IN PART OR WHOLE WITHOUT WRITTEN CONSENT IS SUBJECT TO LEGAL ACTION.

DIVERSIFIED SPACES™
300 South Krueger Street
Suring, WI 54174
diversifiedwoodcrafts.com

TITLE:
ADA INSTRUCTOR DESK
ASSEMBLY INSTRUCTIONS

DRAWING NUMBER:	SCALE:	SHEET:	REVISION:
ADA INSTRUCTOR DESK	NTS	5 OF 14	REV A

ASSEMBLY TEMPLATE

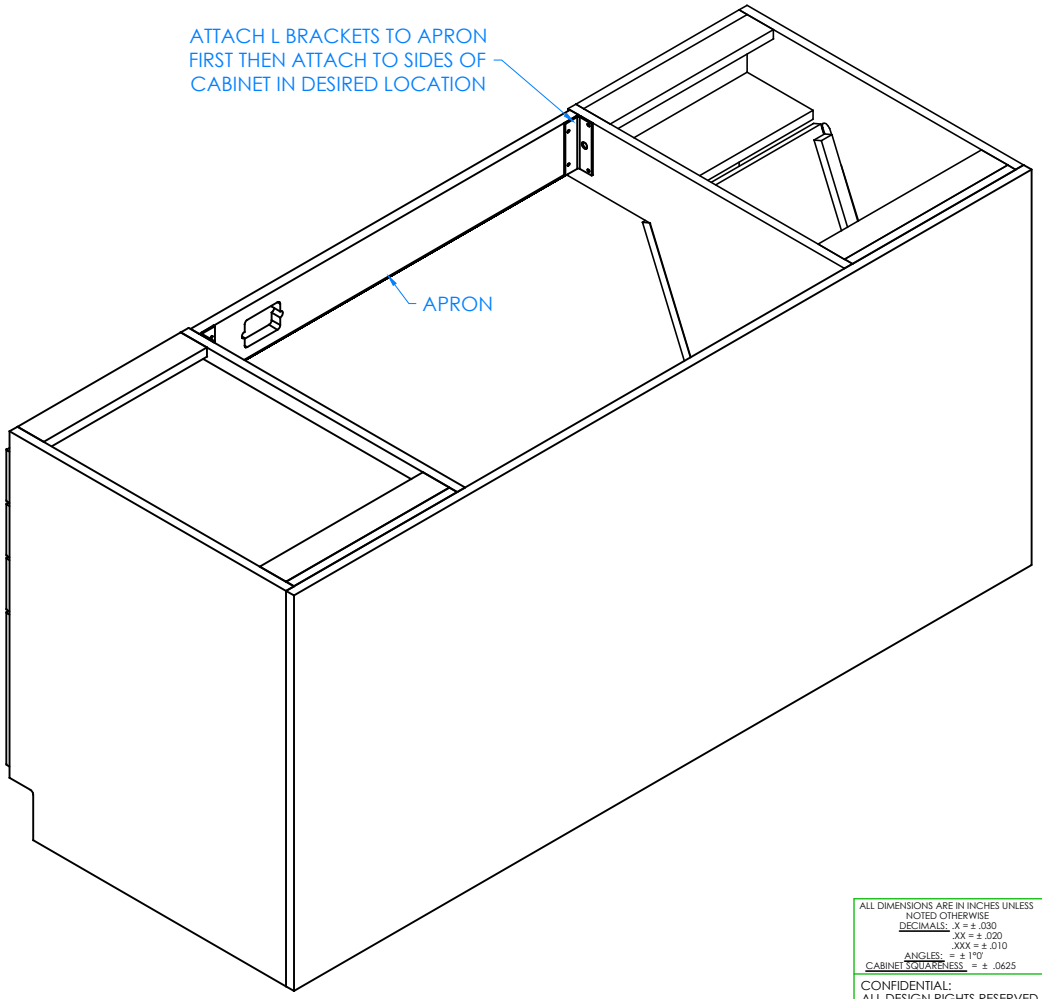

STEP 3:

- ATTACH L BRACKETS TO APRON WITH HARDWARE PROVIDED.
- MAKE SURE BRACKETS ARE FLUSH WITH TOP EDGE OF APRON.
- MOUNT APRON TO SIDES OF BOTH CABINETS IN DESIRED LOCATION WITH REMAINING SCREWS.

NOTE:

1.

BACK SIDE OF INSTRUCTOR'S DESK

REV.	DESCRIPTION	DATE	NAME	ECN NO.
A	CREATED DRAWING	11/14/16	EMR	-

REVISION LEVEL

ALL DIMENSIONS ARE IN INCHES UNLESS NOTED OTHERWISE
DECIMALS: .X = ± .030
.XX = ± .020
.XXX = ± .010
ANGLES: = ± 1°0'
CABINET SQUARENESS = ± .0625

DWN BY:	EMR	DATE DWN:	11/14/16
APR BY:		DATE APR:	
APR BY:		DATE APR:	

CONFIDENTIAL:
ALL DESIGN RIGHTS RESERVED
THE INFORMATION, DATA, DESIGN, AND DRAWINGS EMBODIED IN THIS DOCUMENT AND ALL REPRODUCTIONS THEREOF ARE THE EXCLUSIVE PROPERTY OF DIVERSIFIED WOODCRAFTS, INC.

THESE DOCUMENTS ARE SUPPLIED WITH THE UNDERSTANDING THAT THEY WILL NOT BE DISCLOSED TO THIRD PARTIES WITHOUT WRITTEN CONSENT OF DIVERSIFIED WOODCRAFTS, INC. ANY REPRODUCTION IN PART OR WHOLE WITHOUT WRITTEN CONSENT IS SUBJECT TO LEGAL ACTION.

DIVERSIFIED SPACES™
300 South Krueger Street
Suring, WI 54174
diversifiedwoodcrafts.com

TITLE:
ADA INSTRUCTOR DESK
ASSEMBLY INSTRUCTIONS

DRAWING NUMBER:	SCALE:	SHEET:	REVISION:
ADA INSTRUCTOR DESK	NTS	6 OF 14	REV A

STEP 4:

- APPLY SILICONE ADHESIVE TO TOP EDGES OF CABINETS AND APRON.
- PLACE TOP ON UNIT WITH PROPER OVERHANG (1" OVERHANG ON SIDES AND 1.50" ON FRONT AND BACK).
- CLAMP ON TOP TO TOP RAILS OF CABINETS AND APRON TO REMOVE ANY WARP USING SHIMS AND C-CLAMPS, IF NEEDED, WHEN ALIGNING THE TOP (DO THIS BEFORE ADHESIVE ON EDGES SETS UP).
- LET CURE FOR 6-12 HOURS.

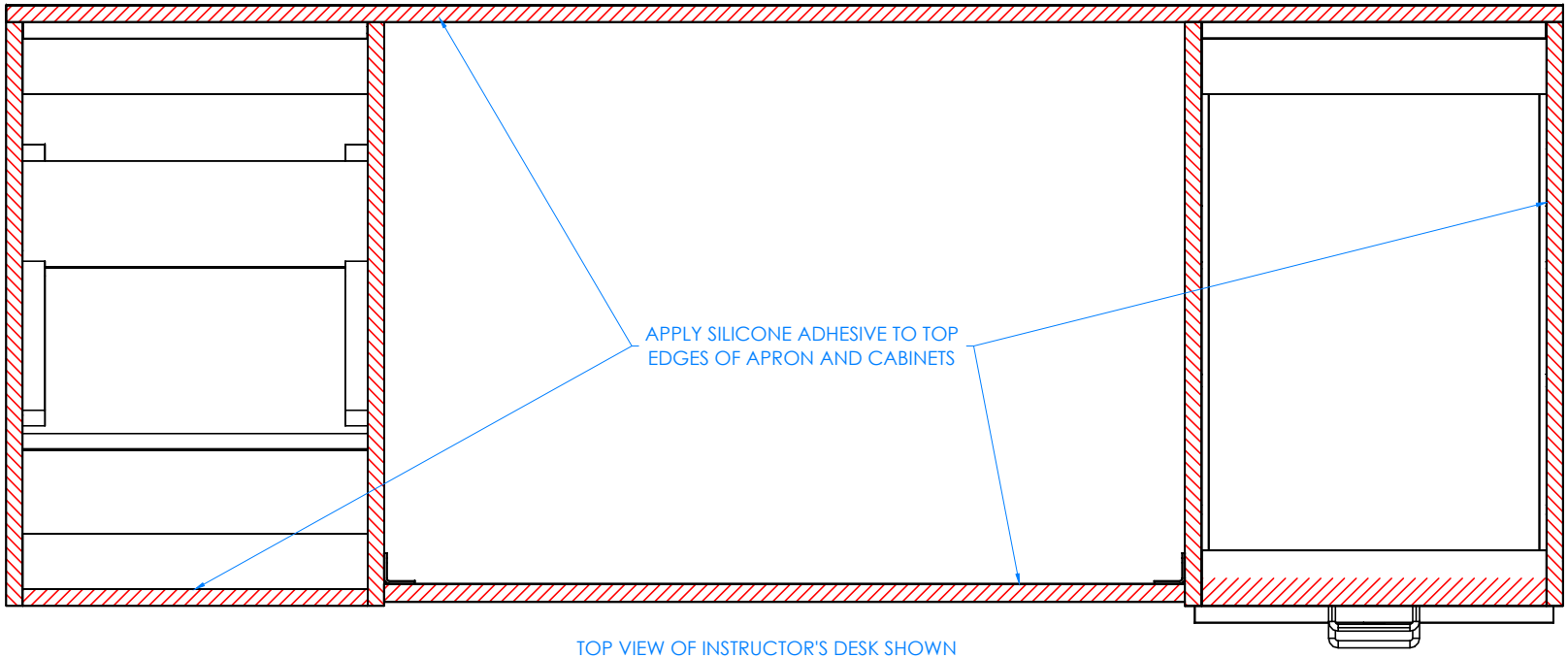

TOP VIEW OF INSTRUCTOR'S DESK SHOWN

NOTE:

1.

REV.	DESCRIPTION	DATE	NAME	ECN NO.
A	CREATED DRAWING	11/14/16	EMR	-

REVISION LEVEL

ALL DIMENSIONS ARE IN INCHES UNLESS NOTED OTHERWISE
DECIMALS: .X = ± .030
.XX = ± .020
.XXX = ± .010
ANGLES: = ± 1°0'
CABINET SQUARENESS = ± .0625

DWN BY:	EMR	DATE DWN:	11/14/16
APR BY:		DATE APR:	
APR BY:		DATE APR:	

CONFIDENTIAL:
ALL DESIGN RIGHTS RESERVED
THE INFORMATION, DATA, DESIGN, AND DRAWINGS EMBODIED IN THIS DOCUMENT AND ALL REPRODUCTIONS THEREOF ARE THE EXCLUSIVE PROPERTY OF DIVERSIFIED WOODCRAFTS, INC.

THESE DOCUMENTS ARE SUPPLIED WITH THE UNDERSTANDING THAT THEY WILL NOT BE DISCLOSED TO THIRD PARTIES WITHOUT WRITTEN CONSENT OF DIVERSIFIED WOODCRAFTS, INC. ANY REPRODUCTION IN PART OR WHOLE WITHOUT WRITTEN CONSENT IS SUBJECT TO LEGAL ACTION.

DIVERSIFIED SPACES™
300 South Krueger Street
Suring, WI 54174
diversifiedwoodcrafts.com

TITLE:
ADA INSTRUCTOR DESK
ASSEMBLY INSTRUCTIONS

DRAWING NUMBER:	SCALE:	SHEET:	REVISION:
ADA INSTRUCTOR DESK	NTS	7 OF 14	REV A

STEP 5:

- APPLY SILICONE ADHESIVE TO THE SINK OPENING ON TOP.
- LOWER SINK INTO OPENING.
- WIPE OFF ANY EXCESS CAULK AND ALLOW TO SET.
- LET CURE FOR 6-12 HOURS.

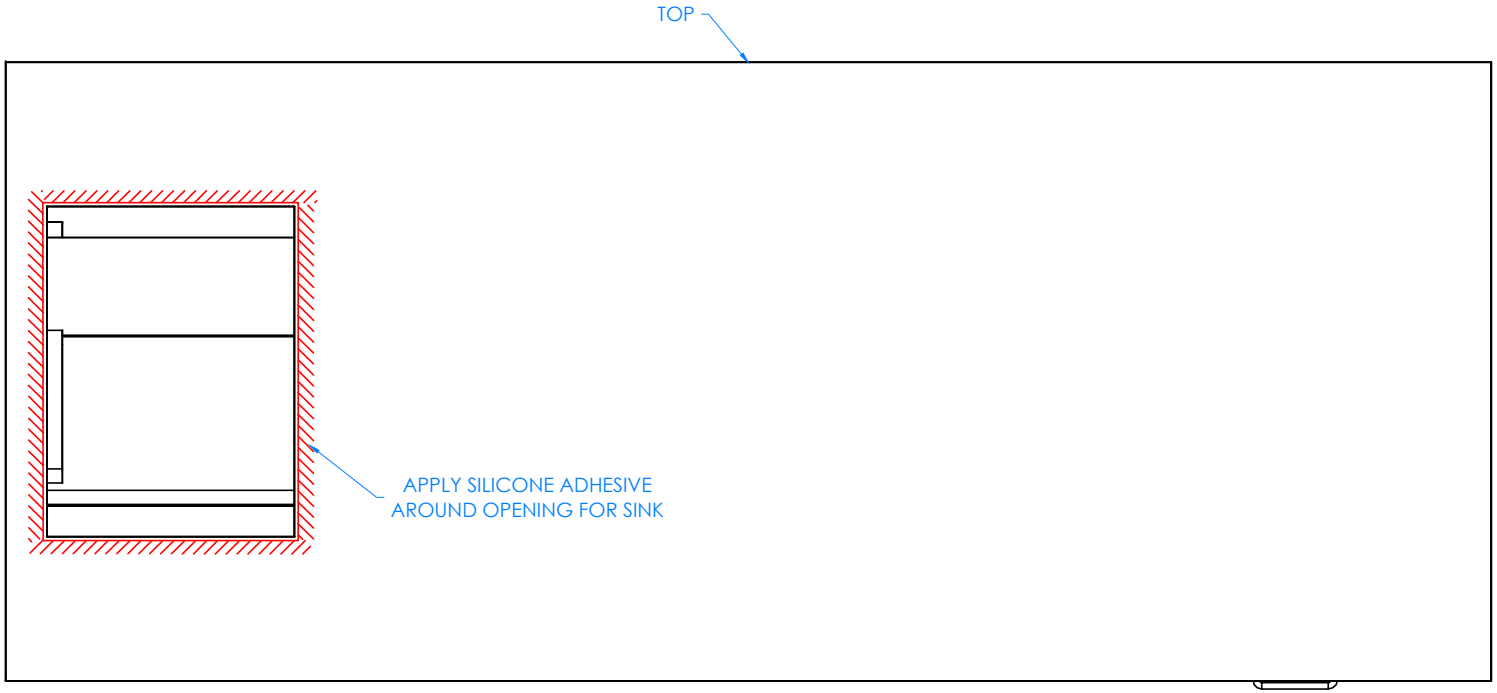

TOP VIEW OF INSTRUCTOR'S DESK SHOWN

NOTE:

1.

REV.	DESCRIPTION	DATE	NAME	ECN NO.
A	CREATED DRAWING	11/14/16	EMR	-

REVISION LEVEL

ALL DIMENSIONS ARE IN INCHES UNLESS NOTED OTHERWISE
DECIMALS: .X = ± .030
.XX = ± .020
.XXX = ± .010
ANGLES: = ± 1°0'
CABINET SQUARENESS = ± .0625

DWN BY:	EMR	DATE DWN:	11/14/16
APR BY:		DATE APR:	
APR BY:		DATE APR:	

CONFIDENTIAL:
ALL DESIGN RIGHTS RESERVED
THE INFORMATION, DATA, DESIGN, AND DRAWINGS EMBODIED IN THIS DOCUMENT AND ALL REPRODUCTIONS THEREOF ARE THE EXCLUSIVE PROPERTY OF DIVERSIFIED WOODCRAFTS, INC.

THESE DOCUMENTS ARE SUPPLIED WITH THE UNDERSTANDING THAT THEY WILL NOT BE DISCLOSED TO THIRD PARTIES WITHOUT WRITTEN CONSENT OF DIVERSIFIED WOODCRAFTS, INC. ANY REPRODUCTION IN PART OR WHOLE WITHOUT WRITTEN CONSENT IS SUBJECT TO LEGAL ACTION.

DIVERSIFIED SPACES™
300 South Krueger Street
Suring, WI 54174
diversifiedwoodcrafts.com

TITLE:
ADA INSTRUCTOR DESK
ASSEMBLY INSTRUCTIONS

DRAWING NUMBER:	SCALE:	SHEET:	REVISION:
ADA INSTRUCTOR DESK	NTS	8 OF 14	REV A

ASSEMBLY TEMPLATE

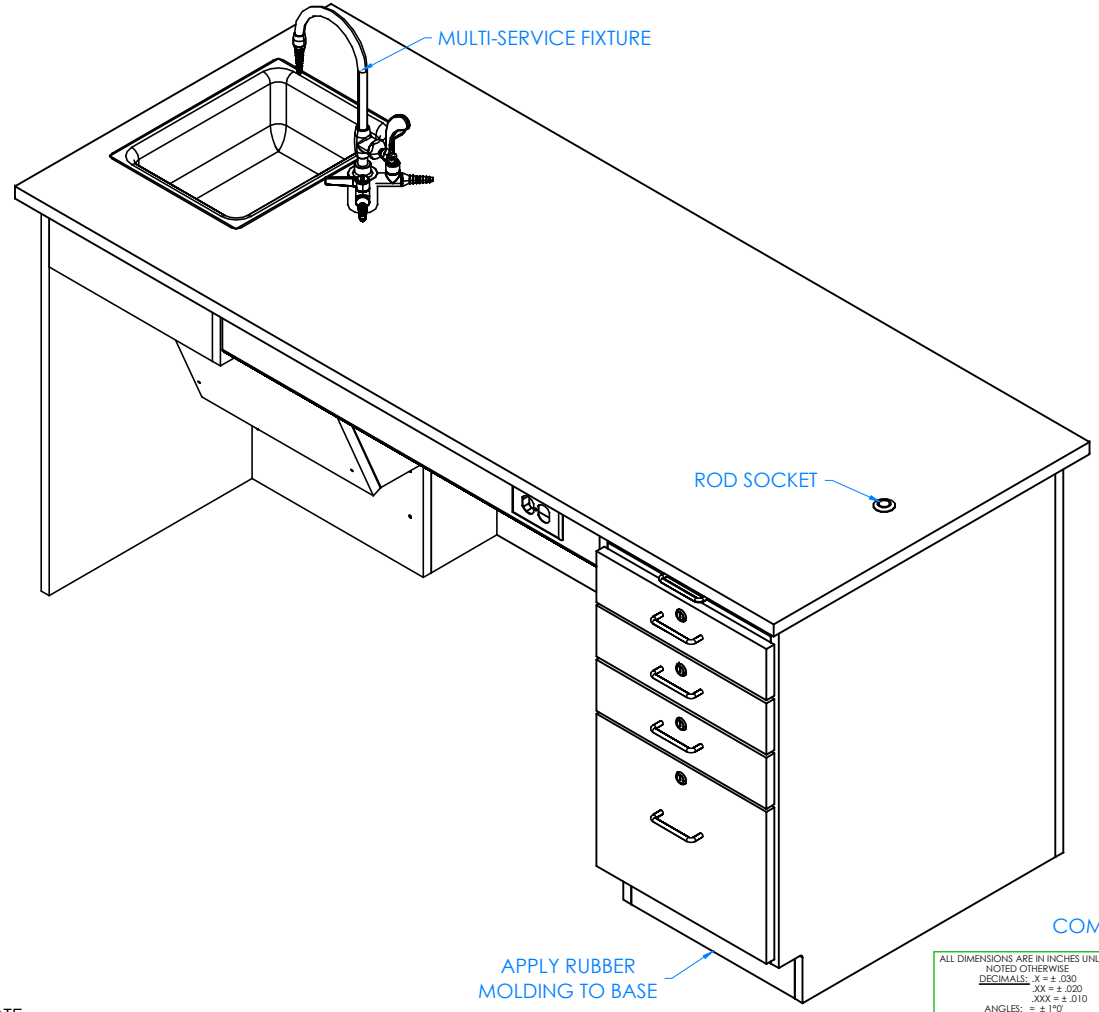

COMPLETE UNIT SHOWN

STEP 6:

- ATTACH RUBBER MOLDING TO BASE OF INSTRUCTOR'S DESK USING CONTACT CEMENT.
- SCREW STAINLESS STEEL CORNER BRACKETS ON EACH CORNER OVER BASE MOLDING WITH THE SCREWS PROVIDED.
- INSTALL MULTI-SERVICE FIXTURE IN THE HOLE PROVIDED ON TOP.
- INSERT ROD SOCKET INTO PRE-DRILLED HOLE IN TOP.
- SEE NEXT SHEET ON HOW TO INSTALL UPRIGHTS AND CROSSBAR.

NOTE:

1. ALL WATER, ELECTRICAL, AND GAS CONNECTIONS SHOULD BE PERFORMED BY A TRAINED PROFESSIONAL PER LOCAL CODE.

REV.	DESCRIPTION	DATE	NAME	ECN NO.
A	CREATED DRAWING	11/14/16	EMR	-

REVISION LEVEL

ALL DIMENSIONS ARE IN INCHES UNLESS NOTED OTHERWISE
DECIMALS: .X = ± .030
.XX = ± .020
.XXX = ± .010
ANGLES: = ± 1°0'
CABINET SQUARENESS = ± .0625

DWN BY:	EMR	DATE DWN:	11/14/16
APR BY:		DATE APR:	
APR BY:		DATE APR:	

CONFIDENTIAL:
ALL DESIGN RIGHTS RESERVED
THE INFORMATION, DATA, DESIGN, AND DRAWINGS EMBODIED IN THIS DOCUMENT AND ALL REPRODUCTIONS THEREOF ARE THE EXCLUSIVE PROPERTY OF DIVERSIFIED WOODCRAFTS, INC.

THESE DOCUMENTS ARE SUPPLIED WITH THE UNDERSTANDING THAT THEY WILL NOT BE DISCLOSED TO THIRD PARTIES WITHOUT WRITTEN CONSENT OF DIVERSIFIED WOODCRAFTS, INC. ANY REPRODUCTION IN PART OR WHOLE WITHOUT WRITTEN CONSENT IS SUBJECT TO LEGAL ACTION.

DIVERSIFIED SPACES™
300 South Krueger Street
Suring, WI 54174
diversifiedwoodcrafts.com

TITLE:
ADA INSTRUCTOR DESK
ASSEMBLY INSTRUCTIONS

DRAWING NUMBER:	SCALE:	SHEET:	REVISION:
ADA INSTRUCTOR DESK	NTS	9 OF 14	REV A

ASSEMBLY TEMPLATE

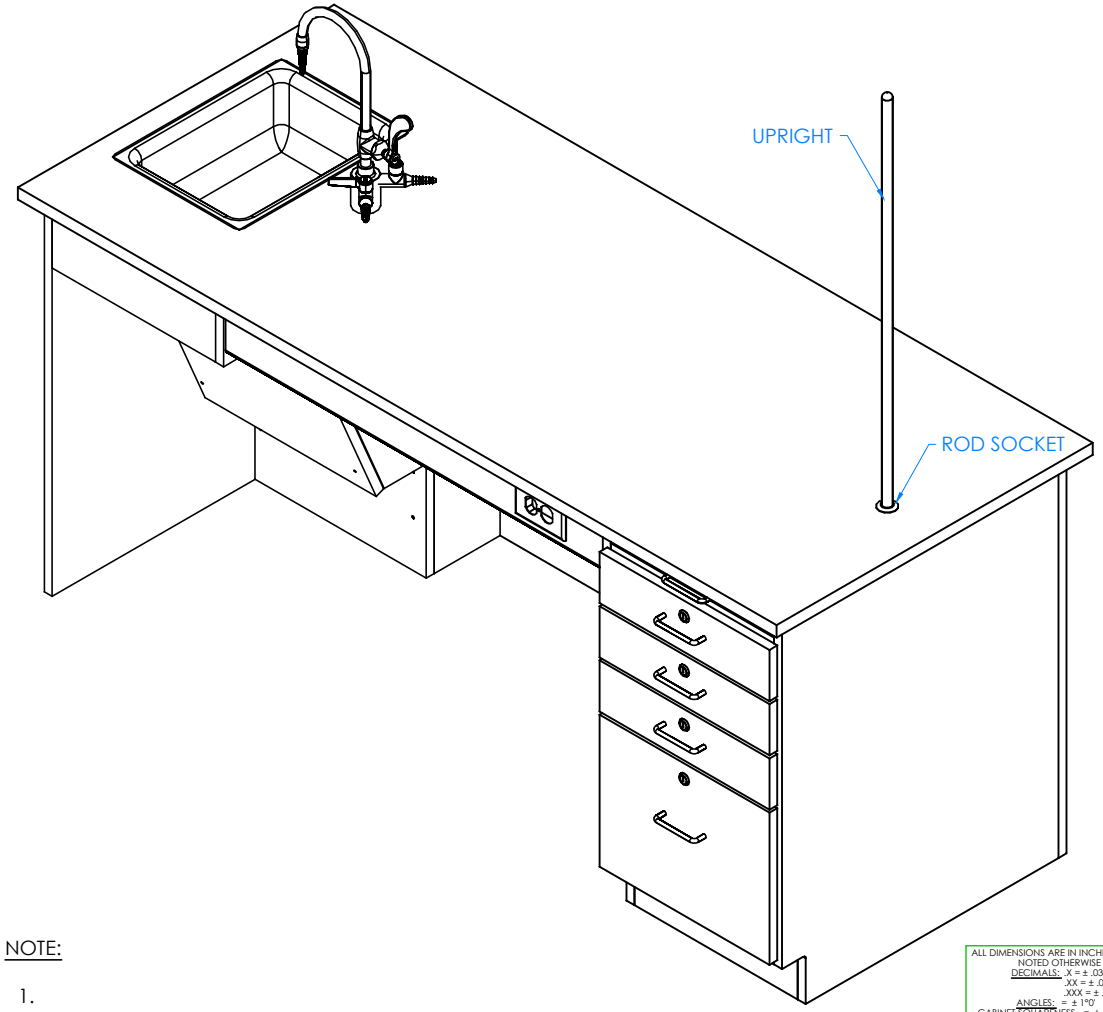

STEP 7:

- INSERT TAPERED END OF UPRIGHT INTO ROD SOCKET ON THE TOP.

NOTE:

1.

REV.	DESCRIPTION	DATE	NAME	ECN NO.
A	CREATED DRAWING	11/14/16	EMR	-

REVISION LEVEL

ALL DIMENSIONS ARE IN INCHES UNLESS NOTED OTHERWISE
DECIMALS: .X = ± .030
.XX = ± .020
.XXX = ± .010
ANGLES: = ± 1°0'
CABINET SQUARENESS = ± .0625

DWN BY:	EMR	DATE DWN:	11/14/16
APR BY:		DATE APR:	
APR BY:		DATE APR:	

CONFIDENTIAL:
ALL DESIGN RIGHTS RESERVED
THE INFORMATION, DATA, DESIGN, AND DRAWINGS EMBODIED IN THIS DOCUMENT AND ALL REPRODUCTIONS THEREOF ARE THE EXCLUSIVE PROPERTY OF DIVERSIFIED WOODCRAFTS, INC.

THESE DOCUMENTS ARE SUPPLIED WITH THE UNDERSTANDING THAT THEY WILL NOT BE DISCLOSED TO THIRD PARTIES WITHOUT WRITTEN CONSENT OF DIVERSIFIED WOODCRAFTS, INC. ANY REPRODUCTION IN PART OR WHOLE WITHOUT WRITTEN CONSENT IS SUBJECT TO LEGAL ACTION.

DIVERSIFIED SPACES™
300 South Krueger Street
Suring, WI 54174
diversifiedwoodcrafts.com

TITLE:
ADA INSTRUCTOR DESK
ASSEMBLY INSTRUCTIONS

DRAWING NUMBER:	SCALE:	SHEET:	REVISION:
ADA INSTRUCTOR DESK	NTS	10 OF 14	REV A

ASSEMBLY TEMPLATE

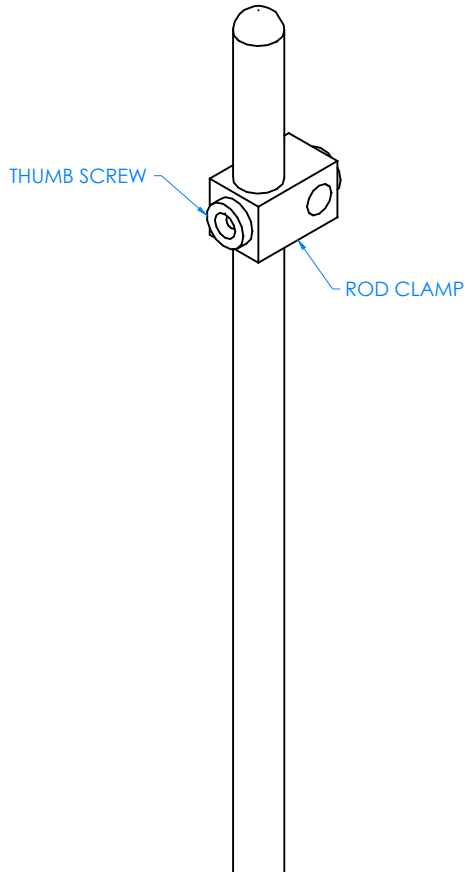

STEP 8:

- SLIDE ROD CLAMP OVER UPRIGHT AND TIGHTEN IN DESIRED LOCATION USING THUMB SCREW PROVIDED ON CLAMP.

NOTE:

1.

CLOSE UP OF UPRIGHT

REV.	DESCRIPTION	DATE	NAME	ECN NO.
A	CREATED DRAWING	11/14/16	EMR	-

REVISION LEVEL

ALL DIMENSIONS ARE IN INCHES UNLESS NOTED OTHERWISE
DECIMALS: .X = ± .030
.XX = ± .020
.XXX = ± .010
ANGLES: = ± 1°0'
CABINET SQUARENESS = ± .0625

DWN BY:	EMR	DATE DWN:	11/14/16
APR BY:		DATE APR:	
APR BY:		DATE APR:	

CONFIDENTIAL:
ALL DESIGN RIGHTS RESERVED
THE INFORMATION, DATA, DESIGN, AND DRAWINGS EMBODIED IN THIS DOCUMENT AND ALL REPRODUCTIONS THEREOF ARE THE EXCLUSIVE PROPERTY OF DIVERSIFIED WOODCRAFTS, INC.

THESE DOCUMENTS ARE SUPPLIED WITH THE UNDERSTANDING THAT THEY WILL NOT BE DISCLOSED TO THIRD PARTIES WITHOUT WRITTEN CONSENT OF DIVERSIFIED WOODCRAFTS, INC. ANY REPRODUCTION IN PART OR WHOLE WITHOUT WRITTEN CONSENT IS SUBJECT TO LEGAL ACTION.

DIVERSIFIED SPACES™
300 South Krueger Street
Suring, WI 54174
diversifiedwoodcrafts.com

TITLE:
ADA INSTRUCTOR DESK
ASSEMBLY INSTRUCTIONS

DRAWING NUMBER:	SCALE:	SHEET:	REVISION:
ADA INSTRUCTOR DESK	NTS	11 OF 14	REV A

ASSEMBLY TEMPLATE

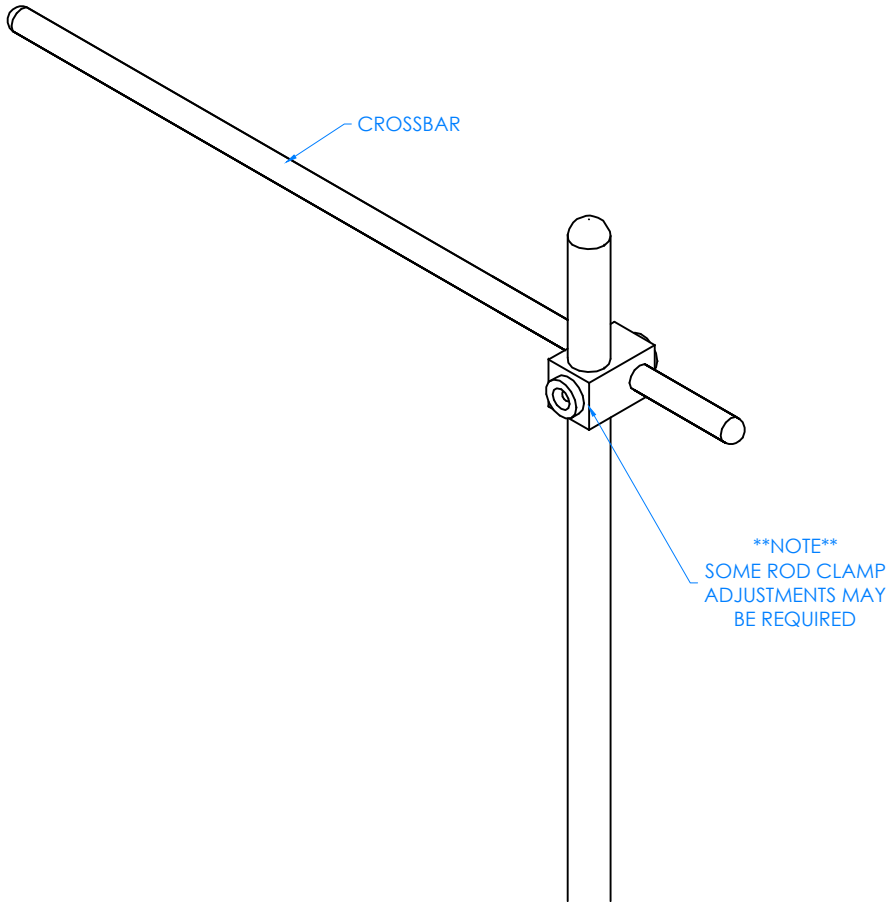

STEP 9:

- SLIDE CROSSBAR THROUGH THE CLAMP.

CLOSE UP OF UPRIGHT AND CROSSBAR ASSEMBLY

NOTE:

1.

REV.	DESCRIPTION	DATE	NAME	ECN NO.
A	CREATED DRAWING	11/14/16	EMR	-

REVISION LEVEL

ALL DIMENSIONS ARE IN INCHES UNLESS NOTED OTHERWISE
DECIMALS: .X = ± .030
.XX = ± .020
.XXX = ± .010
ANGLES: = ± 1°0'
CABINET SQUARENESS = ± .0625

DWN BY:	EMR	DATE DWN:	11/14/16
APR BY:		DATE APR:	
APR BY:		DATE APR:	

CONFIDENTIAL:
ALL DESIGN RIGHTS RESERVED
THE INFORMATION, DATA, DESIGN, AND DRAWINGS EMBODIED IN THIS DOCUMENT AND ALL REPRODUCTIONS THEREOF ARE THE EXCLUSIVE PROPERTY OF DIVERSIFIED WOODCRAFTS, INC.

THESE DOCUMENTS ARE SUPPLIED WITH THE UNDERSTANDING THAT THEY WILL NOT BE DISCLOSED TO THIRD PARTIES WITHOUT WRITTEN CONSENT OF DIVERSIFIED WOODCRAFTS, INC. ANY REPRODUCTION IN PART OR WHOLE WITHOUT WRITTEN CONSENT IS SUBJECT TO LEGAL ACTION.

DIVERSIFIED SPACES™
300 South Krueger Street
Suring, WI 54174
diversifiedwoodcrafts.com

TITLE:
ADA INSTRUCTOR DESK
ASSEMBLY INSTRUCTIONS

DRAWING NUMBER:	SCALE:	SHEET:	REVISION:
ADA INSTRUCTOR DESK	NTS	12 OF 14	REV A

ASSEMBLY TEMPLATE

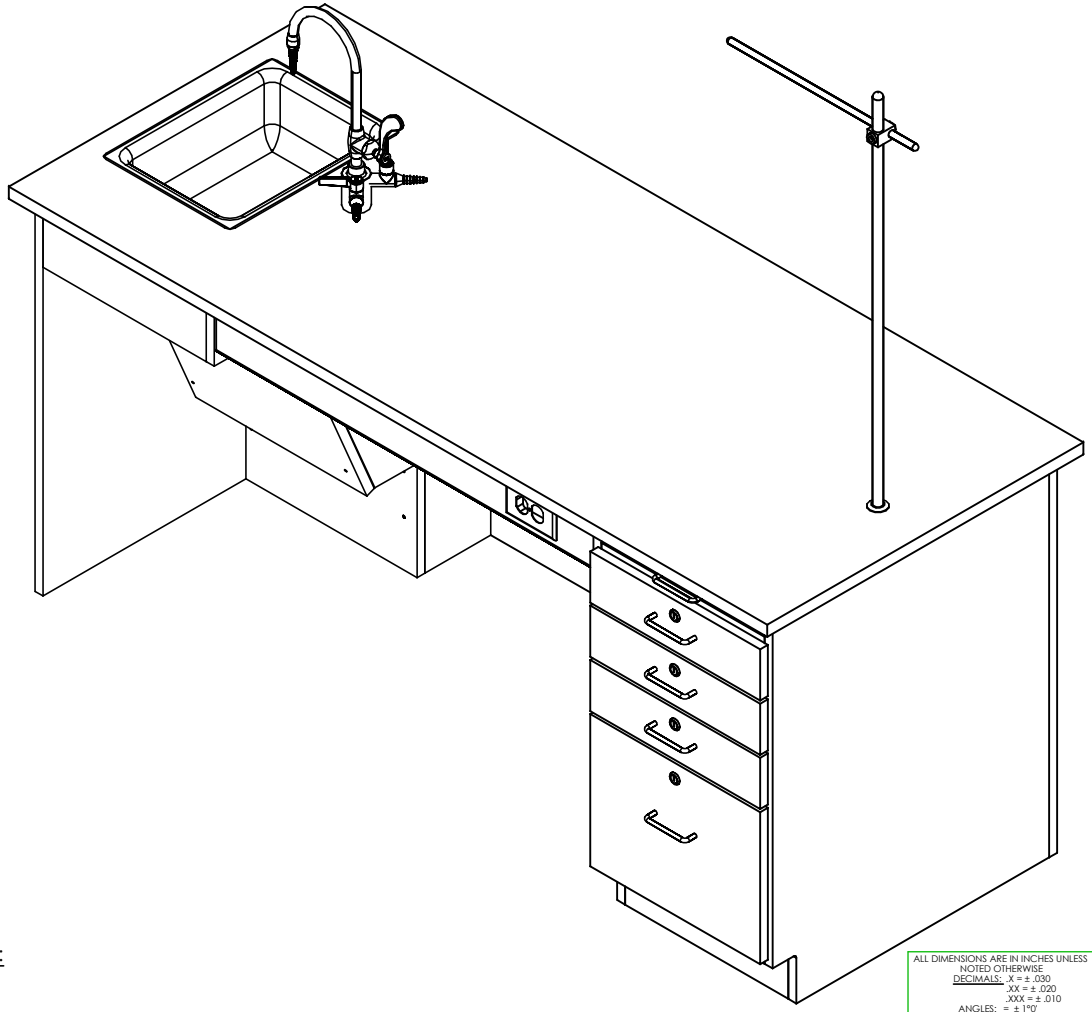

NOTE:

1.

COMPLETE UNIT SHOWN

REV.	DESCRIPTION	DATE	NAME	ECN NO.
A	CREATED DRAWING	11/14/16	EMR	-

REVISION LEVEL

ALL DIMENSIONS ARE IN INCHES UNLESS NOTED OTHERWISE
DECIMALS: .X = ± .030
.XX = ± .020
.XXX = ± .010
ANGLES: = ± 1°0'
CABINET SQUARENESS = ± .0625

DWN BY:	EMR	DATE DWN:	11/14/16
APR BY:		DATE APR:	
APR BY:		DATE APR:	

CONFIDENTIAL:
ALL DESIGN RIGHTS RESERVED
THE INFORMATION, DATA, DESIGN, AND DRAWINGS EMBODIED IN THIS DOCUMENT AND ALL REPRODUCTIONS THEREOF ARE THE EXCLUSIVE PROPERTY OF DIVERSIFIED WOODCRAFTS, INC.

THESE DOCUMENTS ARE SUPPLIED WITH THE UNDERSTANDING THAT THEY WILL NOT BE DISCLOSED TO THIRD PARTIES WITHOUT WRITTEN CONSENT OF DIVERSIFIED WOODCRAFTS, INC. ANY REPRODUCTION IN PART OR WHOLE WITHOUT WRITTEN CONSENT IS SUBJECT TO LEGAL ACTION.

DIVERSIFIED SPACES™
300 South Krueger Street
Suring, WI 54174
diversifiedwoodcrafts.com

TITLE:
ADA INSTRUCTOR DESK
ASSEMBLY INSTRUCTIONS

DRAWING NUMBER:	SCALE:	SHEET:	REVISION:
ADA INSTRUCTOR DESK	NTS	13 OF 14	REV A

TROUBLESHOOTING YOUR GFCI ELECTRICAL RECEPTACLE:

PLEASE NOTE: THROUGHOUT ANY OF THE FOLLOWING STEPS (PROCEDURES); IF YOU ARE NOT SURE YOU CAN DO THIS JOB SAFELY, AND COMPETENTLY, REFER THIS WORK TO QUALIFIED PROFESSIONAL!

If your unit comes equipped with a GFCI (Ground Fault Circuit Interrupter) electrical receptacle, and there is no power in the receptacle please consider/check the following:

- The extension cord (if being used) is working properly.
- The breaker hasn't been tripped, or turned off.

This type of GFCI has two testing-related buttons on it. One button is appropriately labeled "TEST", and the other button is labeled "RESET". To test the GFCI receptacle follow these steps:

- Plug in an appliance (lamp or night light) into the outlet. The light should now be on. Then press the "TEST" button on the GFCI. The GFCI "RESET" button should pop out, and the light should go out.
- If the "RESET" button pops out, but the light doesn't go out, the GFCI has been improperly wired. In this case please contact a certified professional. There may also be a problem with other wiring in the same circuit.
- If the "RESET" button doesn't pop out, the GFCI is defective, or malfunctioned, and should be replaced.
- If the GFCI is functioning properly, and the lamp goes out, press the "RESET" button to restore power to the outlet.

Conversely, if you have a GFI that has tripped (which is common) and it will not reset, you may have a wiring short in the circuit, a defective appliance on the circuit, or the GFI itself has become defective. To test a tripping GFCI follow these steps:

- Remove every appliance connected to the GFCI's circuit and reset it. If it doesn't reset there may either be a wiring fault behind a socket outlet, or your GFCI itself has become faulty.
- Make sure whatever you are plugging into to the GFCI is dry and not damaged.
- Only plug in one item at a time. If you are plugging in a defective item it will cause the GFCI to trip, and that item therefore should be replaced.

If you are still having difficulty the easiest way to troubleshoot a GFI is to obtain a GFI tester, which is available at most hardware stores. It plugs into the GFI outlet, and will supply you with a "snapshot" of your connections, indicating wiring problems and/or the condition of the GFI. Another way to troubleshoot is to simply purchase a new GFI and install it.