ABB BALDOR RELIANCE

Customer information packet

M3555

2HP, 3450RPM, 3PH, 60HZ, 56H, 3428M, TEFC, F1
Class -
Division - Not Applicable

Copyright © All product information within this document is subject to ABB Motors and Mechanical Inc. copyright © protection, unless otherwise noted.
11/5/2026 6:05:12 PM

Specifications

Enclosure	TEFC
Frame	56H
Frame Material	Steel
Frequency	60.00 Hz
Haz Area Division	Not Applicable
Motor Letter Type	Three Phase
Output @ Frequency	2.000 HP @ 60 HZ
Phase	3
Synchronous Speed @ Frequency	3600 RPM @ 60 HZ
Voltage @ Frequency	460.0 V @ 60 HZ
	208.0 V @ 60 HZ
	230.0 V @ 60 HZ
Agency Approvals	CSA
	UR
Ambient Temperature	40 °C
Auxiliary Box	NO AUXILLARY BOX
Auxiliary Box Lead Termination	None
Base Indicator	RG
Bearing Grease Type	Polyrex EM (-20F +300F)
Blower	None
Current @ Voltage	2.900 A @ 460.0 V
	5.800 A @ 230.0 V
	6.200 A @ 208.0 V
Design Code	B
Drip Cover	No Drip Cover
Duty Rating	CONT
Efficiency @ 100% Load	80.0 %
Electrically Isolated Bearing	Not Electrically Isolated
Feedback Device	NO FEEDBACK
Front Face Code	Standard
Front Shaft Indicator	None
Heater Indicator	No Heater

Part Detail

Revision	H
Type	AC
Mech. spec.	34J153
Base	
Status	INA/A
Elec. spec.	34WG0284
Layout	34LYJ153
Eff. date	03-08-2016
CD Diagram	CD0005
Poles	02
Leads	9#18
Proprietary	False
Created date	01-01-0001

High Voltage Full Load Amps	2.9 a
Insulation Class	B
Inverter Code	Not Inverter
KVA Code	H
Lifting Lugs	No Lifting Lugs
Locked Bearing Indicator	No Locked Bearing
Motor Lead Exit	Ko Box
Motor Lead Quantity/Wire Size	9 @ 18 AWG
Motor Lead Termination	Flying Leads
Motor Standards	NEMA
Motor Type	3428M
Mounting Arrangement	F1
Number of Poles	2
Overall Length	12.84 IN
Power Factor	80
Product Family	General Purpose
Pulley End Bearing Type	Ball
Pulley Face Code	Standard
Pulley Shaft Indicator	Standard
Rodent Screen	None
Service Factor	1.15
Shaft Diameter	0.625 IN
Shaft Extension Location	Pulley End
Shaft Ground Indicator	No Shaft Grounding
Shaft Rotation	Reversible
Shaft Slinger Indicator	No Slinger
Speed	3450 rpm
Speed Code	Single Speed
Starting Method	Direct on line
Thermal Device - Bearing	None
Thermal Device - Winding	None
Vibration Sensor Indicator	No Vibration Sensor

Nameplate

NP1256L									
CAT.NO.	M3555								
SPEC.	34J153-0284								
HP	2								
VOLTS	208-230/460								
AMP	6.2-5.8/2.9								
RPM	3450								
FRAME	56H	**HZ**	60			**PH**	3		
SER.F.	1.15	**CODE**	H	**DES**	B	**CLASS**	B		
NEMA-NOM-EFF	80	**PF**	80						
RATING	40C AMB-CONT								
CC									
DE	6203	**ODE**	6203						
ENCL	TEFC	**SN**							
	SFA 6.8-6.4/3.2								

Accessories

Part number	Description	Multiplier
34-171	C FACE KIT	A8

AC Induction Motor Performance Data
Record # 18005
Typical performance - not guaranteed values

Winding: 34WG0284-R001	**Type:** 3428M	**Enclosure:** TEFC

Nameplate Data				**460 V, 60 Hz: High Voltage Connection**	
Rated Output (HP)			2	**Full Load Torque**	3.11 LB-FT
Volts			208-230/460	**Start Configuration**	direct on line
Full Load Amps			6.2-5.8/2.9	**Breakdown Torque**	12 LB-FT
R.P.M.			3450	**Pull-up Torque**	10.6 LB-FT
Hz	60	**Phase**	3	**Locked-rotor Torque**	13.4 LB-FT
NEMA Design Code	B	**KVA Code**	H	**Starting Current**	20.8 A
Service Factor (S.F.)			1.15	**No-load Current**	1.35 A
NEMA Nom. Eff.	80	**Power Factor**	80	**Line-line Res. @ 25ºC**	7.39 Ω
Rating - Duty			40C AMB-CONT	**Temp. Rise @ Rated Load**	85°C
S.F. Amps			6.8-6.4/3.2	**Temp. Rise @ S.F. Load**	103°C
				Locked-rotor Power Factor	65
				Rotor inertia	0.026 LB-FT2

Load Characteristics 460 V, 60 Hz, 2 HP

% of Rated Load	**25**	**50**	**75**	**100**	**125**	**150**	**S.F.**
Power Factor	48	68	80	87	90	91	89
Efficiency	67.7	77.5	80.1	80	78.5	76	79.1
Speed	3547	3502	3447	3389	3324	3247	3350
Line amperes	1.47	1.76	2.21	2.72	3.34	4.07	3.09

ABB Motors and Mechanical Inc.

WINDING # 34WG0284

2 HP 3 PH 60 HZ 3450 RPM 460 V 3428M

Typical performance - not guaranteed values.

TORQUES(LB-FT): PO=12 PU=10.6 LR=13.4 LRA=20.8

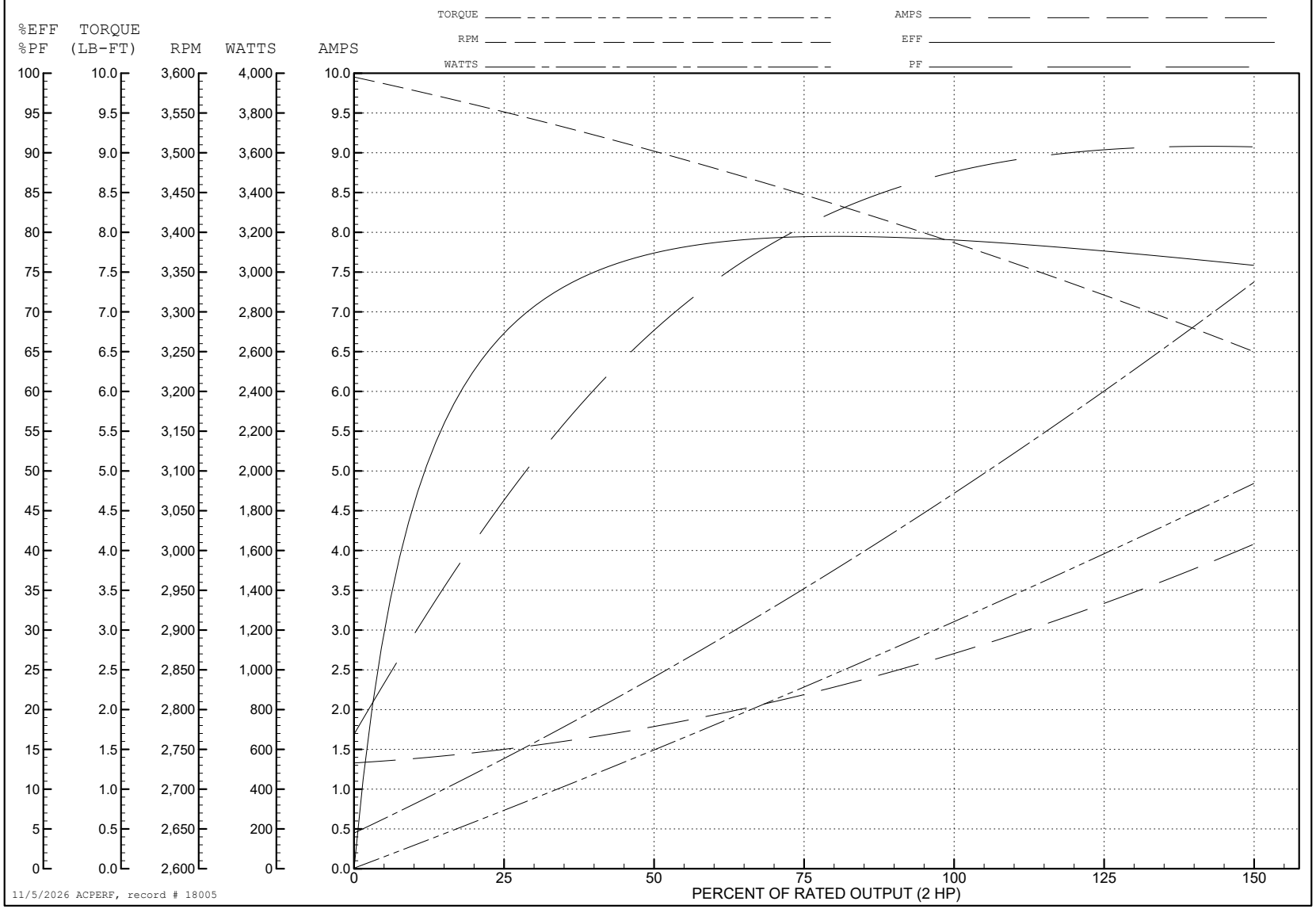

34LYJ153

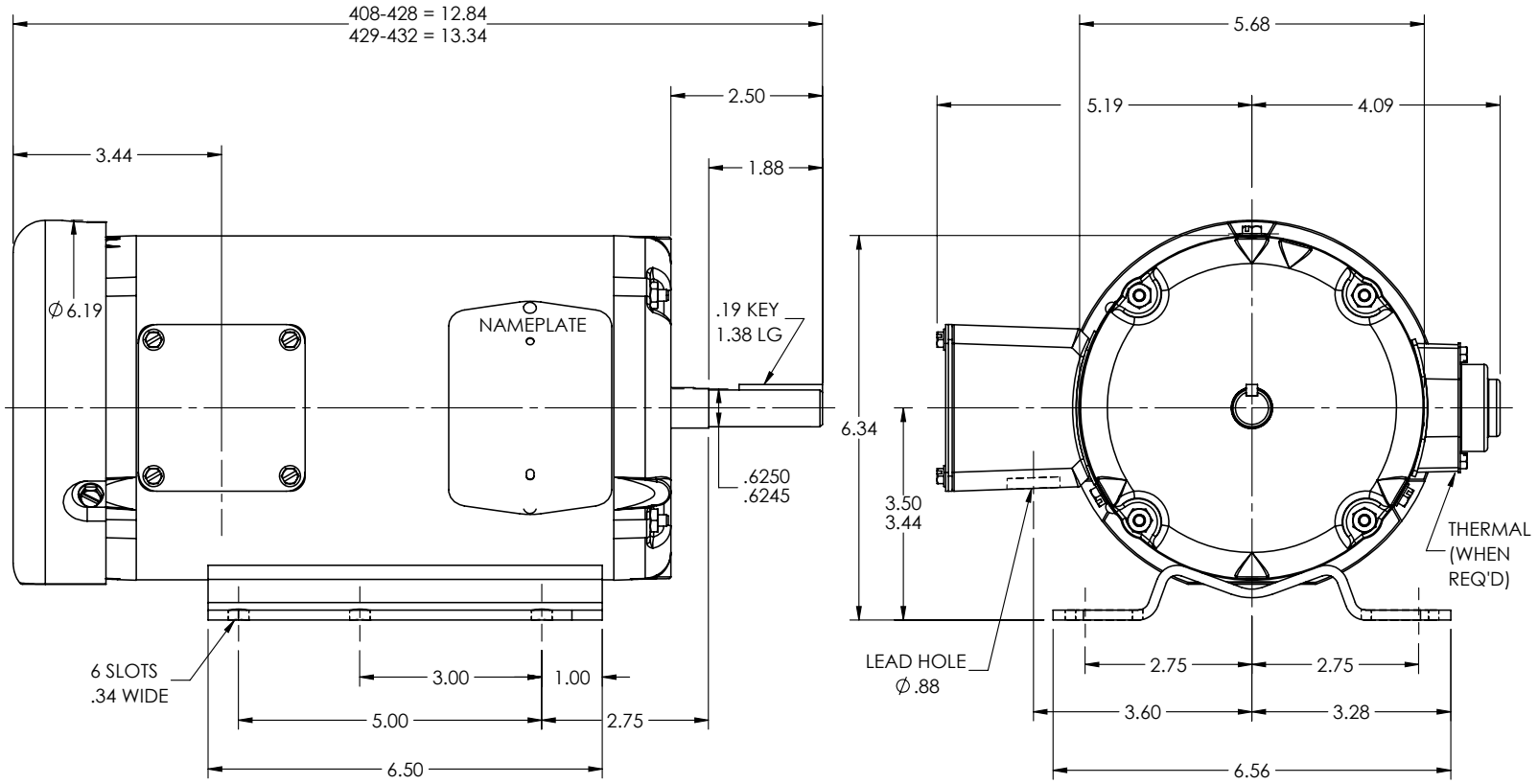

CUSTOMER IS RESPONSIBLE FOR DETERMINING THAT THE PRODUCT WILL PERFORM SUITABLY IN THE INTENDED APPLICATION

REV. DESC: LOAD TO SOLIDWORKS			
REV: C	VERSION: 03	REVISED: 10:33:25 09/22/2022	TDR: 000001194274
34LYJ153	MODEL NO. 34LYJ153		REF: -
	BY: ENFRAJ0		

BALDOR - RELIANCE®

STD HORZ 34M NEMA 56/56H TEFC

34LYJ153

CD0005

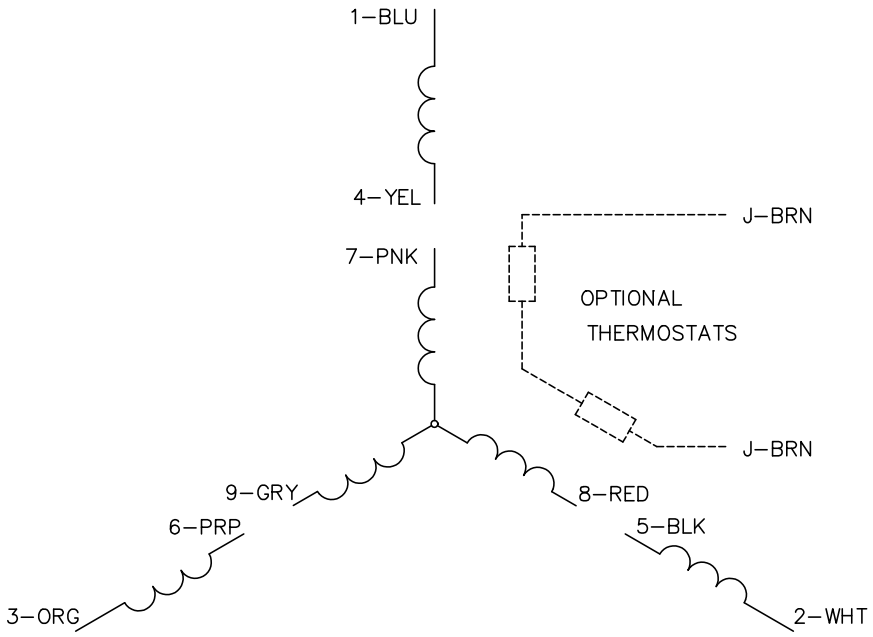

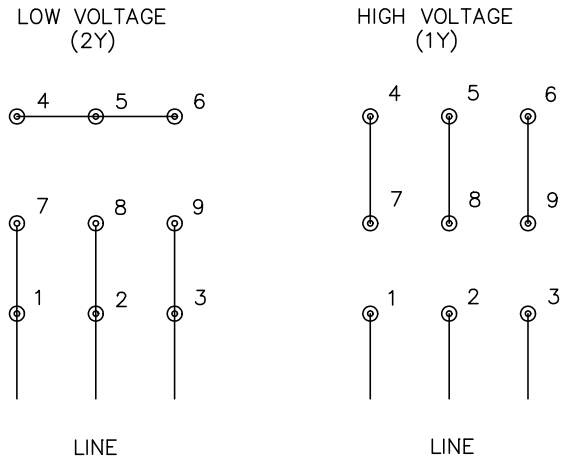

NOTES:

1. INTERCHANGE ANY TWO LINE LEADS TO REVERSE ROTATION.
2. OPTIONAL THERMOSTATS ARE PROVIDED WHEN SPECIFIED.
3. ACTUAL NUMBER OF INTERNAL PARALLEL CIRCUITS MAY BE A MULTIPLE OF THOSE SHOWN ABOVE.
4. LEAD COLORS ARE OPTIONAL. LEADS MUST ALWAYS BE NUMBERED AS SHOWN.

CD0005

REV. DESC: REVISE TO SHOW OPTIONAL COLORS			BALDOR ELECTRIC Co.
REV. LTR: E	BY: JLP	REVISED: 01/19/99 10:15	TDR: 0171435
CD0005		FILE: AAA00005140	MDL: –
		MTL: –	3PH, DV, 9 LEADS