ABB BALDOR RELIANCE

Customer information packet

CEM4314T

60HP, 1780RPM, 3PH, 60HZ, 364TC, A3658M, TEFC
Class - None
Division - Not Applicable

Copyright © All product information within this document is subject to ABB Motors and Mechanical Inc. copyright © protection, unless otherwise noted.
11/5/2026 8:55:45 AM

Specifications

Enclosure	TEFC
Frame	364TC
Frame Material	Iron
Frequency	60.00 Hz
Haz Area Class and Group	None
Haz Area Division	Not Applicable
Motor Letter Type	Three Phase
Output @ Frequency	60.000 HP @ 60 HZ
Phase	3
Synchronous Speed @ Frequency	1800 RPM @ 60 HZ
Voltage @ Frequency	230.0 V @ 60 HZ
	460.0 V @ 60 HZ
Agency Approvals	CCSAUSEEV
	CURUSEEV
	NEMA PREMIUM
	NEMA PREMIUM (OLD LOGO)
Ambient Temperature	40 °C
Auxiliary Box	NO AUXILLARY BOX
Base Indicator	Rigid
Bearing Grease Type	Polyrex EM (-20F +300F)
Current @ Voltage	70.000 A @ 460.0 V
	152.000 A @ 208.0 V
	140.000 A @ 230.0 V
Design Code	B
Drip Cover	No Drip Cover
Duty Rating	CONT
Efficiency @ 100% Load	95.0 %
Feedback Device	NO FEEDBACK
Heater Indicator	No Heater
High Voltage Full Load Amps	70.0 a
Insulation Class	F
Inverter Code	Inverter Ready

Part Detail

Revision	U
Type	AC
Mech. spec.	
Base	
Status	PRD/A
Elec. spec.	A36WG4075
Layout	617428-019
Eff. date	02-13-2025
CD Diagram	CD0180
Poles	04
Leads	3#4,6#6
Proprietary	False
Created date	10-19-2010

KVA Code	G
Lifting Lugs	No Lifting Lugs
Max Speed	2700 rpm
Motor Lead Quantity/Wire Size	3 @ 4 AWG
Motor Standards	NEMA
Motor Type	A3658M
Mounting Arrangement	F1
Number of Poles	4
Overall Length	33.44 IN
Power Factor	84
Pulley End Bearing Type	Ball
Pulley Face Code	P-Base
Service Factor	1.15
Shaft Diameter	2.375 IN
Shaft Ground Indicator	No Shaft Grounding
Shaft Rotation	Reversible
Shaft Slinger Indicator	No Slinger
Speed	1780 rpm
Speed Code	Single Speed
Starting Method	Direct on line
Thermal Device - Bearing	None
Thermal Device - Winding	None

Nameplate

NP3979LUA

CAT #	CEM4314T	**SER**		**CC**	010A								
SPEC	P36G4663	**RATING**	40C AMB-CONT										
HZ	**VOLTS**	**AMPS**	**RPM**	**HP**	**CODE**	-	**SF**	**DES**	**PF**		**NEMA NOM. EFF**		
60	230/460	140/70	1780	60	G		1.15	B	84	%	95	%	
	-									%		%	
PH	3	**CL**	F	**MAX CORR KVAR**	15								
BRG	**DE**	6313	**ODE**	6313	**ENCL**	TEFC	**FR**	364TC		54			
GREASE	POLYREX EM						**MTR WT**	854	**LBS**				
USABLE AT	50HZ 50HP 190/380V 138/69A						SF1.0						
INVERTER DUTY	**CT**	15-60	**HZ**	4:1	**VT**	3-60	**HZ**	20:1	**CHP**	60-90	**HZ**	1.5:1	**1.0 SF VPWM**
MAX RPM	2700												

AC induction motor performance data

Record #72794 - Typical performance - not guaranteed values

Winding	A36WG4075
Type	A3658M
Enclosure	TEFC

Nameplate data			
Rated Output			60
Volts			230/460
Full Load Amps			140/70
R.P.M.			1780
Hz	60	Phase	3
KVA Code			G
S.F.			1.15
NEMA Nom. Eff.	95	Power Factor	84
Duty			CONT
S.F. Amps			

460 V, 60 Hz:

High Voltage Connection	
Full Load Torque	176.4 LB-FT
Start Configuration	direct on line
Breakdown Torque	422 LB-FT
Pull-up Torque	276 LB-FT
Locked-rotor Torque	352 LB-FT
Starting Current	462 A
No-load Current	24.8
Line-line Res. @ 25°C	0.10816 Ω
Temp. Rise @ Rated Load	56°C
Temp. Rise @ S.F. Load	70°C
Locked-rotor Power Factor	32.3
Rotor inertia	0

Load Characteristics 460 V, 60 Hz, 60 HP

% of Rated Load	NL	25	50	75	100	125	150	SF
Power Factor	4	51	73	81	84	86	85	85
Efficiency	0	92.6	95.1	95.4	95.2	94.6	93.8	94.8
Speed	1798.9	1796.4	1792.4	1788	1783.7	1778.3	1772.3	1780
Line amperes	24.8	29.7	40.7	54.4	69.7	86.6	105	79.8

ABB BALDOR RELIANCE

CUSTOMER INFORMATION PACKET

CEM4314T - 60HP, 1780RPM, 3PH, 60HZ, 364TC, A3658M, TEFC

WINDING # A36WG4075

60 HP 3 PH 60 HZ 1780 RPM 460 V A3658M

TORQUES (LB-FT): PO=422.00 PU=276.00 LR=352.00 LRA=462.00

REVIEW

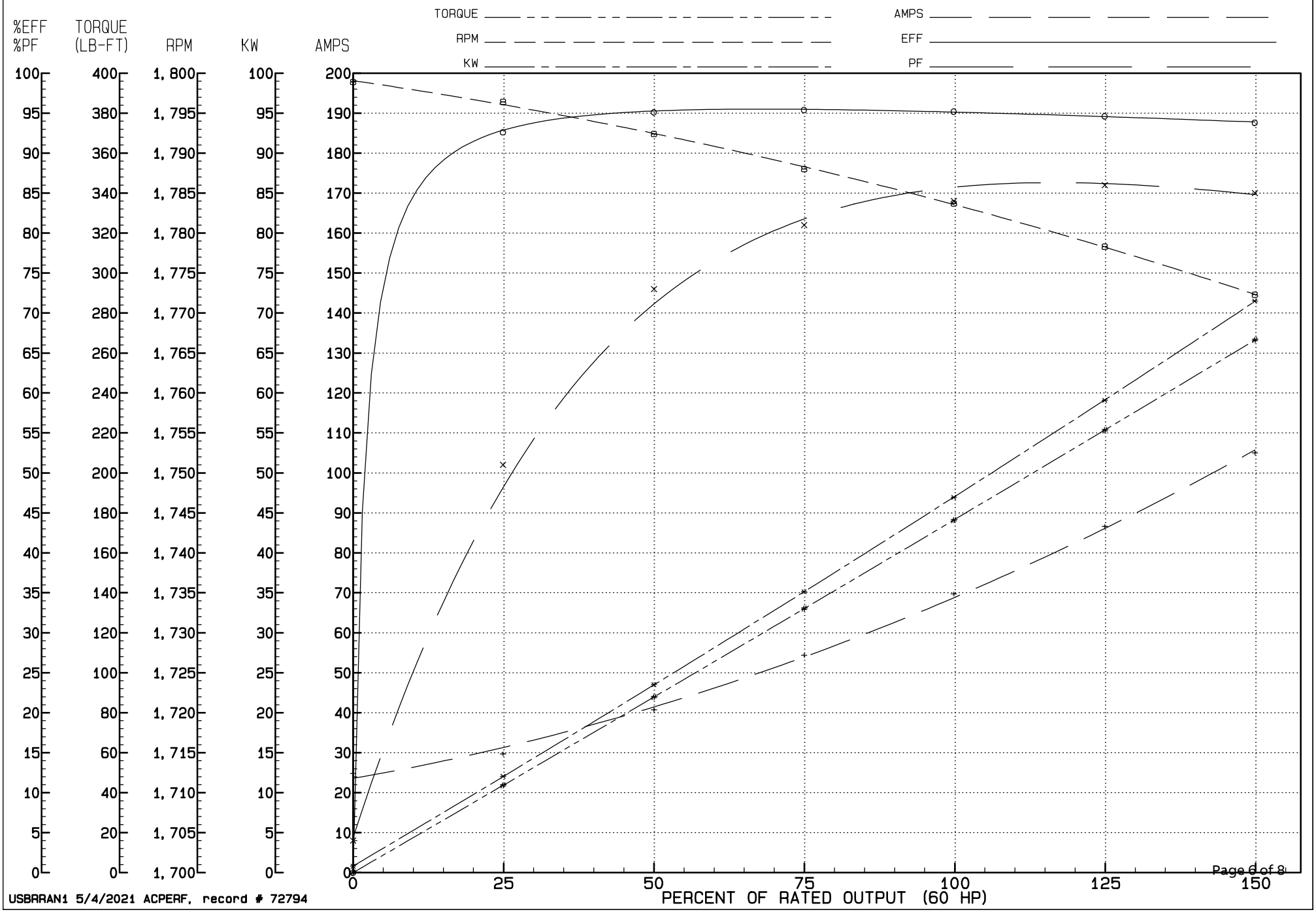

USBRRAN1 5/4/2021 ACPERF, record # 72794

617428-019

DUTY MASTER ALTERNATING CURRENT MOTORS

SQUIRREL-CAGE INDUCTION
CAST IRON CONSTRUCTION

ENCLOSURE: TOTALLY ENCLOSED
MOUNTING: FOOT

FRAMES 364TC-365TC

COOLING: FAN COOLED

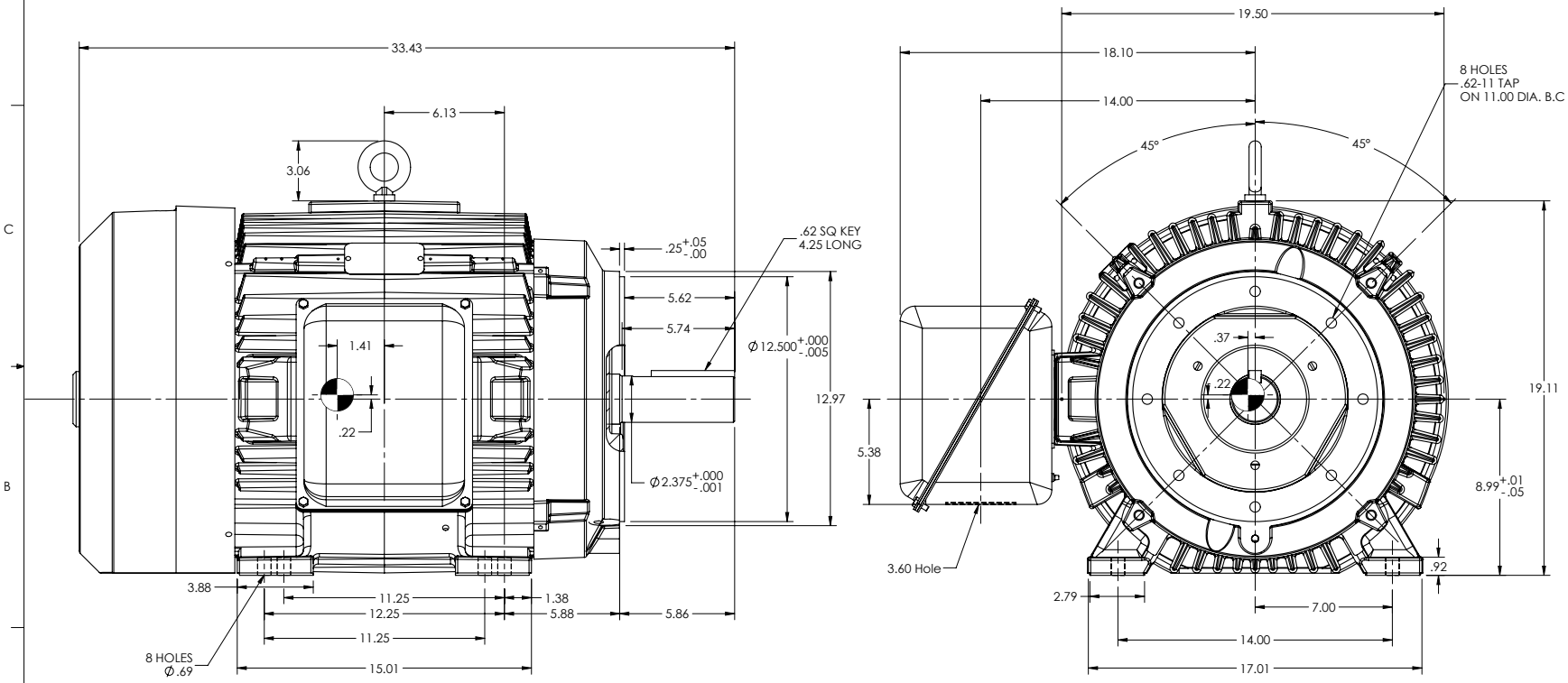

MAXIMUM PERMISSIBLE SHAFT RUNOUT WHEN MEASURED AT END OF STD. SHAFT EXTENSION IS .002 T.I.R. UP TO AND INCLUDING 1.625 DIA AND .003 T.I.R. 1.625 DIA. TO 5 INCH DIA.

WEIGHT (LBS): 364TC = 815
365TC = 855

MOTOR WEIGHTS MAY VARY BY 15% DEPENDING UPON RATING.

CENTER OF GRAVITY WITH X & Y VARY ± 1.0 INCH FROM CENTER.

CUSTOMER IS RESPONSIBLE FOR DETERMINING THAT BALDOR'S PRODUCT WILL PERFORM SUITABLY IN THE INTENDED APPLICATION

REV. DESC: FIX COG			
REV: D	VERSION: 04	REVISED: 09:34:56 05/28/2019	TDR: 000001109340
MODEL NO. 617428-019			REF:
BY: RAGJSS1			B

BALDOR

DIM SHEET 364-5TC TEFC (611740-003-SH1)

617428-019

CD0180

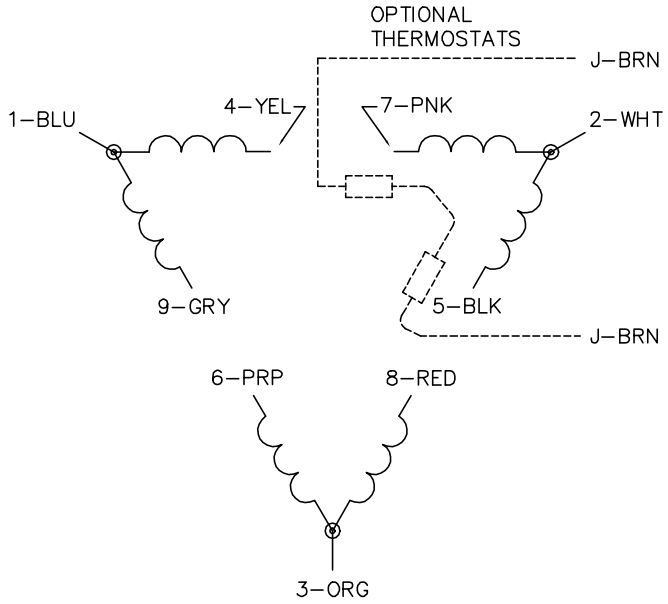

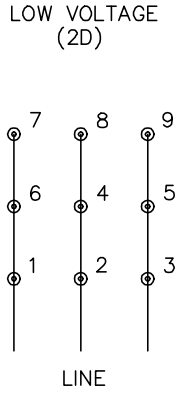

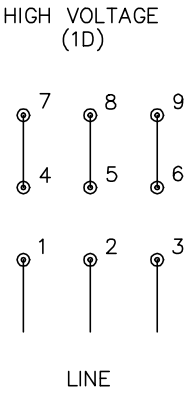

NOTES:

1. INTERCHANGE ANY TWO LINE LEADS TO REVERSE ROTATION.
2. OPTIONAL THERMOSTATS ARE PROVIDED WHEN SPECIFIED.
3. ACTUAL NUMBER OF INTERNAL PARALLEL CIRCUITS MAY BE A MULTIPLE OF THOSE SHOWN ABOVE.
4. LEAD COLORS ARE OPTIONAL. LEADS MUST ALWAYS BE NUMBERED AS SHOWN.

CD0180

REV. DESC: ADD CLASS CONN00000007		
REV. LTR: D	VERSION: 01	TDR: 000001099922
FILE: \AAA\00005\148	REVISED: 10:25:29 02/19/2019	BY: ENBRIR0
MTL: –		

BALDOR - RELIANCE®

3PH, DV, 9 LEADS, DELTA CONNECTION

SH 1 of 1