Honeywell

VGF Flanged Globe Valves

PRODUCT DATA

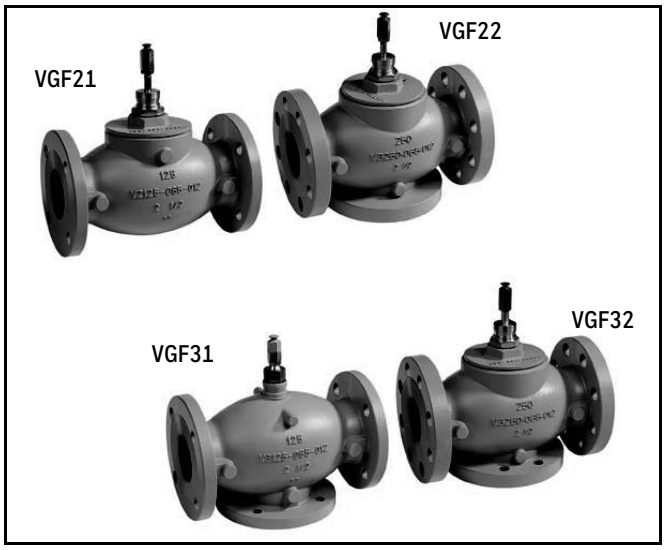

APPLICATION

VGF Flanged Globe Valves are used for 2-position or modulating control of steam, hot water, or chilled water in closed loop HVAC systems. They can be operated by a large variety of electric and pneumatic actuators. Three-way valves are available in mixing or diverting flow patterns.

FEATURES

- **ANSI Class 125 and Class 250 flanged cast iron bodies.**
- **Face-to-face flange dimensions per ANSI/ISA S75.03 standard.**
- **Sizes from 2-1/2 to 6 inches (DN65 to DN150).**
- **Metal-to-metal seating for long life span.**
- **Differential pressure of 175 psi, ANSI Class IV leakage on pressure-balanced models.**
- **Steam inlet pressure up to 100 psig (689 kPa).**
- **Self-adjusting packing.**
- **Equal percentage and linear flow characteristics to ensure precise control in a variety of applications.**

Related Literature

— 62-0213 VGF Installation Instructions
— 63-1301 VGF Specification Data
— 63-9271 Field Devices Catalog (for compatible actuators)

SPECIFICATIONS

Models: See Tables 2 and 3.

Dimensions: See Fig. 3 and 4.

Action:
Mixing valves: Stem up to close port A-AB.
All others: Stem down to close port A-AB.

Controlled Media:
Water up to 50% glycol solution.
Saturated steam (2-way models) up to 100 psig.
Not suitable for open loop systems such as condenser water or potable water.

Valve Body Temperature-Pressure Ratings:
Water: ANSI Class 125 and 250. See Table 1.
Steam: 337°F (170°C); 100 psig (689 kPa).

Flow Capacity: See Table 8.

Stroke and Mounting:
2-1/2 and 3 inch (DN65 and DN80): 3/4 in. (20mm) stroke, 1-3/8 in. bonnet, 1/4-28 UNF stem thread and button.
4 to 6 inch (DN100 to DN150): 1-1/2 in. (38mm) stroke, 1-7/8 in. bonnet, 7/16-20 UNF stem thread, and button.

Maximum Temperature Differential (alternating hot/cold water): 108°F (60°C).

Flow Characteristic:
VGF2__E_: Equal percentage.
VGF2__L_: Linear.
VGF3_EM_ Mixing Valve: Equal percentage port A-AB, Linear port B-AB.
VGF3_LD_ Diverting Valve: Linear.

Rangeability: 50:1.

Close-Off Pressure (maximum):
VGF21_P pressure-balanced: 175 psi (1207 kPa).
All others: Proportional to actuator force. See Tables 4, 5. and 6.

Leakage Rate (maximum):
VGF21_P pressure-balanced: 0.01% of Cv (ANSI Class IV).
VGF2__S: 0.05% of Cv (ANSI Class III).
Three-way:
VGF31EM and VGF32EM <.05% of CV A to AB (ANSI Class III), <.1% of CV B-AB
VGF31LD and VGF32LD <.05% of CV AB to A (ANSI Class III), <.1% of CV AB-B

63-2618-01

Valve Body:
End connections:
Face-to-face flange dimensions per ANSI/ISA 75.03. Bolt holes conform to ANSI B16.1. VGF3 valves have standard ANSI flange connections on A and AB ports. B ports have lugged connections. See Table 7. VGF3 B-Port Threads

Material: Cast iron, ASTM A126 Class B (GG25).

Trim:
Seat:
Mixing valve: body integrated (cast iron).
All others: Stainless steel.
Plug: Stainless steel, skirt guided.
Stem: Stainless steel.
Packing: Spring loaded PTFE cone rings.

Accessories:
43196000-001 High Temperature Kit. Fits 2 1/2 and 3" VGF valves.
43196000-038 High Temperature Kit. Fits 4 to 6" VGF valves.
R43176754002 Packing Kit for 2-1/2 in. and 3 in. VGF21 and VGF31 valves.
R43176755004 Packing Kit for 2-1/2 in. and 3 in. VGF22, VGF32, VGF21EP, and VGF21LP valves.
R43176755005 Packing Kit for all 4 in. to 6 in. VGF valves.

Replacement stem buttons:
2-1/2 to 3 in (DN65-80): 209117
4 to 6 in (DN100-150): 209116

NOTE: Packing kits include copper ring, spring, bearing, packing, and gasket.

Table 1. Water Temperature and Maximum Pressure.

Temperature °F (°C)	System Pressure	
	VGF21, VGF31	VGF22, VGF32
35 to 130 (2-66)	175 psig (1206 kPa)	400 psig (2758 kPa)
Up to 200 (< 93)	165 psig (1138 kPa)	370 psig (2251 kPa)
Up to 250 (< 121)	150 psig (1034 kPa)	340 psig (2344 kPa)
Up to 300 (< 149)	140 psig (965 kPa)	310 psig (2137 kPa)
Up to 337 (<170)	125 psig (862 kPa)	280 psig (1931 kPa)

Table 2. VGF2 2-way.

VGF2	Valve, Globe, Flanged, 2-way			
	1	ANSI 125		
	2	ANSI 250		
		EP	Equal percent flow, pressure-balanced[a]	
		ES	Equal percent flow, standard	
		LP	Linear flow, pressure-balanced[a]	
		LS	Linear flow, standard[a]	
			25	2-1/2 in. ports
			30	3 in. ports
			40	4 in. ports
			50	5 in. ports
			60	6 in. ports
VGF2	1	EP	30	e.g.: 3 in. flanged, equal percent, pressure-balanced, ANSI 125

[a] ANSI 125 only

Table 3. VGF3 3-way.

VGF3	Valve, Globe, Flanged, 3-way			
	1	ANSI 125		
	2	ANSI 250		
		EM	Equal percentage flow, mixing	
		LD	Linear flow, diverting	
			25	2-1/2 in. (DN65) ports
			30	3 in. (DN80) ports
			40	4 in. (DN100) ports
			50	5 in. (DN125) ports
			60	6 in. (DN150) ports
VGF3	**2**	**EM**	**40**	e.g.: 4 in. (DN100) flanged mixing valve, ANSI 250

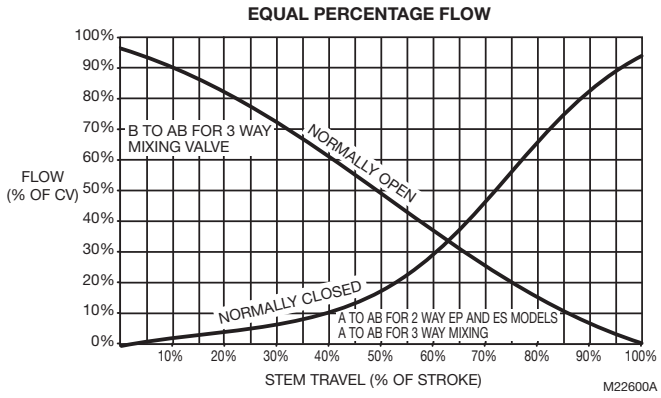

Fig. 1. Equal percentage flow diagram.

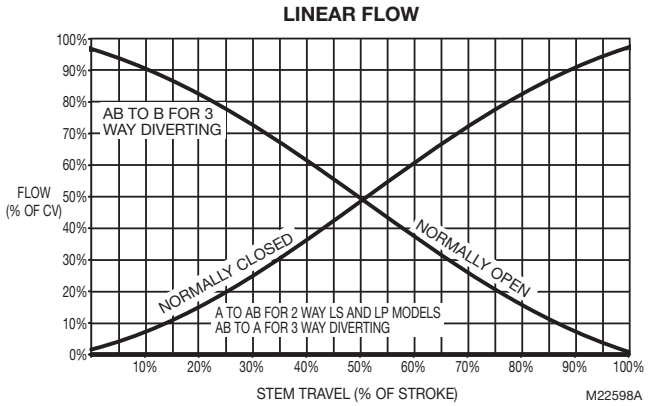

Fig. 2. Linear flow diagram.

Table 4. Close-off Ratings for VGF valves and Linear Actuators.

Valve Characteristics				Linear Globe Valve Actuator Models						
				Actuator Part Number	ML6420A3049 ML6420A3056	ML7420A3055 ML7420A3063	ML6425A3022 ML6425B3013	ML7425A3013 ML7425B3012	ML6421A1017 ML7421A1032	ML6421B1040 ML7421B1023
				Stem Force (lbf)	135	135	135	135	404	404
				Actuator Stroke (inch)	3/4	3/4	3/4	3/4	3/4	1-1/2
Connection Size (inch)	Stem Travel (inch)	Body Pattern	Flow Characteristics	Valve Part Number	Close-Off (psi)					
Class 125 Pressure Balanced Globe Valves										
2-1/2	3/4	2-Way	Equal Percentage	VGF21EP25	175	175	175	175	175	
3	3/4	2-Way	Equal Percentage	VGF21EP30	175	175	175	175	175	
4	1-1/2	2-Way	Equal Percentage	VGF21EP40						175
5	1-1/2	2-Way	Equal Percentage	VGF21EP50						175
6	1-1/2	2-Way	Equal Percentage	VGF21EP60						175
2-1/2	3/4	2-Way	Linear	VGF21LP25	175	175	175	175	175	
3	3/4	2-Way	Linear	VGF21LP30	175	175	175	175	175	
4	1-1/2	2-Way	Linear	VGF21LP40						175
5	1-1/2	2-Way	Linear	VGF21LP50						175
6	1-1/2	2-Way	Linear	VGF21LP60						175
Class 125 Standard Globe Valves										
2-1/2	3/4	2-Way	Equal Percentage	VGF21ES25	17	17	17	17	68	
3	3/4	2-Way	Equal Percentage	VGF21ES30	7	7	7	7	33	
4	1-1/2	2-Way	Equal Percentage	VGF21ES40						33
5	1-1/2	2-Way	Equal Percentage	VGF21ES50						13
6	1-1/2	2-Way	Equal Percentage	VGF21ES60						13
2-1/2	3/4	2-Way	Linear	VGF21LS25	17	17	17	17	68	
3	3/4	2-Way	Linear	VGF21LS30	7	7	7	7	33	
4	1-1/2	2-Way	Linear	VGF21LS40						33
5	1-1/2	2-Way	Linear	VGF21LS50						13
6	1-1/2	2-Way	Linear	VGF21LS60						13

Valve Characteristics				Linear Globe Valve Actuator Models						
				Actuator Part Number	ML6420A3049 ML6420A3056	ML7420A3055 ML7420A3063	ML6425A3022 ML6425B3013	ML7425A3013 ML7425B3012	ML6421A1017 ML7421A1032	ML6421B1040 ML7421B1023
				Stem Force (lbf)	135	135	135	135	404	404
				Actuator Stroke (inch)	3/4	3/4	3/4	3/4	3/4	1-1/2
Connection Size (inch)	Stem Travel (inch)	Body Pattern	Flow Characteristics	Valve Part Number	Close-Off (psi)					
2-1/2	3/4	Mixing	Equal Percentage *	VGF31EM25	23	23	23	23	94	
3	3/4	Mixing	Equal Percentage *	VGF31EM30	15	15	15	15	58	
4	1-1/2	Mixing	Equal Percentage *	VGF31EM40						33
5	1-1/2	Mixing	Equal Percentage *	VGF31EM50						13
6	1-1/2	Mixing	Equal Percentage *	VGF31EM60						13
2-1/2	3/4	Diverting	Linear	VGF31LD25	17	17	17	17	68	
3	3/4	Diverting	Linear	VGF31LD30	7	7	7	7	33	
4	1-1/2	Diverting	Linear	VGF31LD40						33
5	1-1/2	Diverting	Linear	VGF31LD50						13
6	1-1/2	Diverting	Linear	VGF31LD60						13
Class 250 Standard Globe Valves										
2-1/2	3/4	2-Way	Equal Percentage	VGF22ES25	17	17	17	17	68	
3	3/4	2-Way	Equal Percentage	VGF22ES30	7	7	7	7	33	
4	1-1/2	2-Way	Equal Percentage	VGF22ES40						33
5	1-1/2	2-Way	Equal Percentage	VGF22ES50						13
6	1-1/2	2-Way	Equal Percentage	VGF22ES60						13
2-1/2	3/4	Mixing	Equal Percentage *	VGF32EM25	23	23	23	23	94	
3	3/4	Mixing	Equal Percentage *	VGF32EM30	15	15	15	15	58	
4	1-1/2	Mixing	Equal Percentage *	VGF32EM40						33
5	1-1/2	Mixing	Equal Percentage *	VGF32EM50						13
6	1-1/2	Mixing	Equal Percentage *	VGF32EM60						13
2-1/2	3/4	Diverting	Linear	VGF32LD25	17	17	17	17	68	
3	3/4	Diverting	Linear	VGF32LD30	7	7	7	7	33	
4	1-1/2	Diverting	Linear	VGF32LD40						33
5	1-1/2	Diverting	Linear	VGF32LD50						13
6	1-1/2	Diverting	Linear	VGF32LD60						13

* Mixing valves B-port have linear flow characteristics.

Table 5. Close-off Ratings for VGF valves with Direct Coupled Actuators and Linkages.

Valve Characteristics				Rotary Direct Coupled Actuators with Globe Valve Linkage							
				Linkage Part Number	Q5020A1003		Q5024B2230		Q5024B2240		
				Linkage Type	Single actuator		Dual actuator		Dual actuator		
				Stem Adapter / Collar Part Number	N/A		HU5024-001		HU5024-002		
				Actuator torque (lb-in)	175	300	350 (2x175)	600 (2x300)	350 (2x175)	600 (2x300)	
				Stem Force (lbf)	234	402	360	617	272	467	
				Effective Linkage Stroke (inch)	3/4	3/4	3/4	3/4	1-1/2	1-1/2	
Connection Size (inch)	Stem Travel (inch)	Body Pattern	Flow characteristics	Valve Part Number	Close-Off (psi)						
Class 125 Pressure Balanced Globe Valves											
2-1/2	3/4	2-Way	Equal Percentage	VGF21EP25	175	175	175	175			
3	3/4	2-Way	Equal Percentage	VGF21EP30	175	175	175	175			
4	1-1/2	2-Way	Equal Percentage	VGF21EP40					175	175	
5	1-1/2	2-Way	Equal Percentage	VGF21EP50					175	175	
6	1-1/2	2-Way	Equal Percentage	VGF21EP60					175	175	
2-1/2	3/4	2-Way	Linear	VGF21LP25	175	175	175	175			
3	3/4	2-Way	Linear	VGF21LP30	175	175	175	175			
4	1-1/2	2-Way	Linear	VGF21LP40					175	175	
5	1-1/2	2-Way	Linear	VGF21LP50					175	175	
6	1-1/2	2-Way	Linear	VGF21LP60					175	175	
Class 125 Standard Globe Valves											
2-1/2	3/4	2-Way	Equal Percentage	VGF21ES25	39	68	61	105			
3	3/4	2-Way	Equal Percentage	VGF21ES30	19	33	30	52			
4	1-1/2	2-Way	Equal Percentage	VGF21ES40					22	39	
5	1-1/2	2-Way	Equal Percentage	VGF21ES50					9	15	
6	1-1/2	2-Way	Equal Percentage	VGF21ES60					9	15	
2-1/2	3/4	2-Way	Linear	VGF21LS25	39	68	61	105			
3	3/4	2-Way	Linear	VGF21LS30	19	33	30	52			
4	1-1/2	2-Way	Linear	VGF21LS40					22	39	
5	1-1/2	2-Way	Linear	VGF21LS50					9	15	
6	1-1/2	2-Way	Linear	VGF21LS60					9	15	
2-1/2	3/4	Mixing	Equal Percentage *	VGF31EM25	55	94	77	133			
3	3/4	Mixing	Equal Percentage *	VGF31EM30	34	58	52	89			
4	1-1/2	Mixing	Equal Percentage *	VGF31EM40					22	39	
5	1-1/2	Mixing	Equal Percentage *	VGF31EM50					9	15	
6	1-1/2	Mixing	Equal Percentage *	VGF31EM60					9	15	
2-1/2	3/4	Diverting	Linear	VGF31LD25	39	68	61	105			
3	3/4	Diverting	Linear	VGF31LD30	19	33	30	52			
4	1-1/2	Diverting	Linear	VGF31LD40					22	39	
5	1-1/2	Diverting	Linear	VGF31LD50					9	15	
6	1-1/2	Diverting	Linear	VGF31LD60					9	15	

Valve Characteristics				Rotary Direct Coupled Actuators with Globe Valve Linkage						
				Linkage Part Number	Q5020A1003		Q5024B2230		Q5024B2240	
				Linkage Type	Single actuator		Dual actuator		Dual actuator	
				Stem Adapter / Collar Part Number	N/A		HU5024-001		HU5024-002	
				Actuator torque (lb-in)	175	300	350 (2x175)	600 (2x300)	350 (2x175)	600 (2x300)
				Stem Force (lbf)	234	402	360	617	272	467
				Effective Linkage Stroke (inch)	3/4	3/4	3/4	3/4	1-1/2	1-1/2
Connection Size (inch)	Stem Travel (inch)	Body Pattern	Flow characteristics	Valve Part Number	Close-Off (psi)					
Class 250 Standard Globe Valves										
2-1/2	3/4	2-Way	Equal Percentage	VGF22ES25	39	68	61	105		
3	3/4	2-Way	Equal Percentage	VGF22ES30	19	33	30	52		
4	1-1/2	2-Way	Equal Percentage	VGF22ES40					22	39
5	1-1/2	2-Way	Equal Percentage	VGF22ES50					9	15
6	1-1/2	2-Way	Equal Percentage	VGF22ES60					9	15
2-1/2	3/4	Mixing	Equal Percentage *	VGF32EM25	55	94	77	133		
3	3/4	Mixing	Equal Percentage *	VGF32EM30	34	58	52	89		
4	1-1/2	Mixing	Equal Percentage *	VGF32EM40					22	39
5	1-1/2	Mixing	Equal Percentage *	VGF32EM50					9	15
6	1-1/2	Mixing	Equal Percentage *	VGF32EM60					9	15
2-1/2	3/4	Diverting	Linear	VGF32LD25	39	68	61	105		
3	3/4	Diverting	Linear	VGF32LD30	19	33	30	52		
4	1-1/2	Diverting	Linear	VGF32LD40					22	39
5	1-1/2	Diverting	Linear	VGF32LD50					9	15
6	1-1/2	Diverting	Linear	VGF32LD60					9	15

* Mixing valves B-port have linear flow characteristics.

Table 6. Close-off Ratings for VGF valves with Modutrol IV Actuators and Linkages.

Valve Characteristics				Modutrol IV Actuators with Q5001 Valve Linkage				
				Linkage Part Number	Q5001D1000	Q5001D1018		Q5001D1026
				Actuator torque (lb-in)	150	150	300	300
				Stem Force (lbf)	160	160	320	320
				Linkage Stroke (inch)	3/4	3/4	3/4	1-1/2
Connection Size (inch)	Stem Travel (inch)	Body Pattern	Flow characteristics	Valve Part Number	Close-Off (psi)			
Class 125 Pressure Balanced Globe Valves								
2-1/2	3/4	2-Way	Equal Percentage	VGF21EP25	175	175	175	
3	3/4	2-Way	Equal Percentage	VGF21EP30	175	175	175	
4	1-1/2	2-Way	Equal Percentage	VGF21EP40				175
5	1-1/2	2-Way	Equal Percentage	VGF21EP50				175
6	1-1/2	2-Way	Equal Percentage	VGF21EP60				175
2-1/2	3/4	2-Way	Linear	VGF21LP25	175	175	175	
3	3/4	2-Way	Linear	VGF21LP30	175	175	175	
4	1-1/2	2-Way	Linear	VGF21LP40				175
5	1-1/2	2-Way	Linear	VGF21LP50				175
6	1-1/2	2-Way	Linear	VGF21LP60				175

Valve Characteristics				Modutrol IV Actuators with Q5001 Valve Linkage				
				Linkage Part Number	Q5001D1000	Q5001D1018		Q5001D1026
				Actuator torque (lb-in)	150	150	300	300
				Stem Force (lbf)	160	160	320	320
				Linkage Stroke (inch)	3/4	3/4	3/4	1-1/2
Connection Size (inch)	Stem Travel (inch)	Body Pattern	Flow characteristics	Valve Part Number	Close-Off (psi)			
Class 125 Standard Globe Valves								
2-1/2	3/4	2-Way	Equal Percentage	VGF21ES25	27	27	55	
3	3/4	2-Way	Equal Percentage	VGF21ES30	13	13	27	
4	1-1/2	2-Way	Equal Percentage	VGF21ES40				27
5	1-1/2	2-Way	Equal Percentage	VGF21ES50				10
6	1-1/2	2-Way	Equal Percentage	VGF21ES60				10
2-1/2	3/4	2-Way	Linear	VGF21LS25	27	27	55	
3	3/4	2-Way	Linear	VGF21LS30	13	13	27	
4	1-1/2	2-Way	Linear	VGF21LS40				27
5	1-1/2	2-Way	Linear	VGF21LS50				10
6	1-1/2	2-Way	Linear	VGF21LS60				10
2-1/2	3/4	Mixing	Equal Percentage *	VGF31EM25	34	34	69	
3	3/4	Mixing	Equal Percentage *	VGF31EM30	23	23	46	
4	1-1/2	Mixing	Equal Percentage *	VGF31EM40				27
5	1-1/2	Mixing	Equal Percentage *	VGF31EM50				10
6	1-1/2	Mixing	Equal Percentage *	VGF31EM60				10
2-1/2	3/4	Diverting	Linear	VGF31LD25	27	27	55	
3	3/4	Diverting	Linear	VGF31LD30	13	13	27	
4	1-1/2	Diverting	Linear	VGF31LD40				27
5	1-1/2	Diverting	Linear	VGF31LD50				10
6	1-1/2	Diverting	Linear	VGF31LD60				10
Class 250 Standard Globe Valves								
2-1/2	3/4	2-Way	Equal Percentage	VGF22ES25	27	27	55	
3	3/4	2-Way	Equal Percentage	VGF22ES30	13	13	27	
4	1-1/2	2-Way	Equal Percentage	VGF22ES40				27
5	1-1/2	2-Way	Equal Percentage	VGF22ES50				10
6	1-1/2	2-Way	Equal Percentage	VGF22ES60				10
2-1/2	3/4	Mixing	Equal Percentage *	VGF32EM25	34	34	69	
3	3/4	Mixing	Equal Percentage *	VGF32EM30	23	23	46	
4	1-1/2	Mixing	Equal Percentage *	VGF32EM40				27
5	1-1/2	Mixing	Equal Percentage *	VGF32EM50				10
6	1-1/2	Mixing	Equal Percentage *	VGF32EM60				10
2-1/2	3/4	Diverting	Linear	VGF32LD25	27	27	55	
3	3/4	Diverting	Linear	VGF32LD30	13	13	27	
4	1-1/2	Diverting	Linear	VGF32LD40				27
5	1-1/2	Diverting	Linear	VGF32LD50				10
6	1-1/2	Diverting	Linear	VGF32LD60				10

* Mixing valves B-port have linear flow characteristics.

Table 7. VGF3 B-Port Threads.

Model	Thread	# of Holes
VGF31EM25	0.625-11	4
VGF31EM30	0.625-11	4
VGF31EM40	0.625-11	8
VGF31EM50	0.750-10	8
VGF31EM60	0.750-10	8
VGF32EM25	0.750-10	8
VGF32EM30	0.750-10	8
VGF32EM40	0.750-10	8
VGF32EM50	0.750-10	8
VGF32EM60	0.750-10	12
VGF31LD25	0.625-11	4
VGF31LD30	0.625-11	4
VGF31LD40	0.625-11	8
VGF31LD50	0.750-10	8
VGF31LD60	0.750-10	8
VGF32LD25	0.750-10	8
VGF32LD30	0.750-10	8
VGF32LD40	0.750-10	8
VGF32LD50	0.750-10	8
VGF32LD60	0.750-10	12

IMPORTANT

Valve sizing is important for correct system operation. Undersized valves do not have sufficient capacity at maximum load. Oversized valves do not have sufficient authority over the load in modulating applications.

Oversized valves can initiate hunting and the seat and throttling plug can be damaged because of the restricted opening. Some variables that must be determined are:

- *Medium (steam, water, glycol solution 50 percent maximum) to be controlled.*
- *Maximum temperature and pressure of the medium at the valve.*
- *Pressure differential that exists across the valve under maximum load conditions.*
- *Maximum capacity the valve must deliver.*
- *Maximum line pressure differential against which the valve actuator must close.*

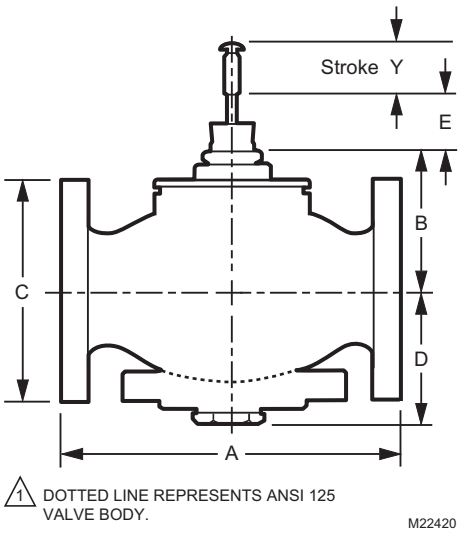

Fig. 3. Dimensions for two-way models in inches (mm) (See Table 8).

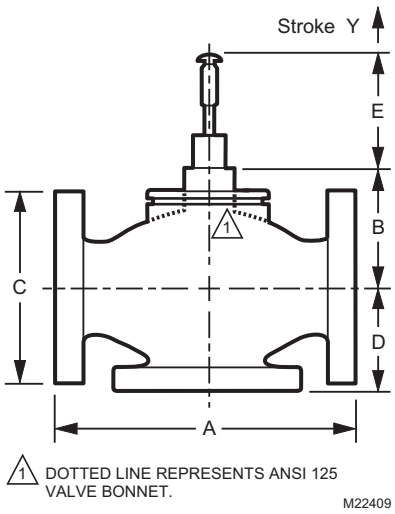

Fig. 4. Dimensions for three-way models in inches (mm) (See Table 8).

Table 8. Valve Sizes, Flow Capacities, and Dimensions.

Model Number	Size		Cv (kvs)	Dimensions, in. (mm) See Fig. 3 (Two-way Valves) or Fig. 4 (Three-way Valves)					
	in.	DN		A	B	C	D	E[a]	Y (stroke)
2-way valves, ANSI Class 125 Stem down to close. Equal percentage or Linear flow characteristic.									
VGF21_S25	2-1/2	65	70 (60)	10-7/8 (276)	4-3/8 (112)	7 (178)	–	3-1/2 (89)	3/4 (19)
VGF21_S30	3	80	125 (108)	11-3/4 (298)	6-3/8 (161)	7-1/2 (191)	–		
VGF21_S40	4	100	155 (133)	13-7/8 (352)	5-7/8 (150)	9 (229)	–	5-1/4 (133)	1-1/2 (38)
VGF21_S50	5	125	320 (275)	15-3/4 (400)	6-3/16 (157)	10 (254)	–		
VGF21_S60	6	150	370 (318)	17-3/4 (451)	6-3/16 (157)	11 (279)	–		
2-way valves, ANSI Class 250. Stem down to close. Equal percentage flow characteristic.									
VGF22ES25	2-1/2	65	70 (60)	11-1/2 (292)	4-3/8 (112)	7-1/2 (191)	–	3-1/2 (89)	3/4 (19)
VGF22ES30	3	80	120 (103)	12-1/2 (318)	6-3/8 (161)	8-1/4 (210)	–		
VGF22ES40	4	100	150 (129)	14-1/2 (368)	5-7/8 (150)	10 (254)	–	5-1/4 (133)	1-1/2 (38)
VGF22ES50	5	125	320 (275)	16-5/8 (422)	6-3/16 (157)	11 (279)	–		
VGF22ES60	6	150	370 (318)	18-5/8 (473)	6-3/16 (157)	12-1/2 (318)	–		
2-way valves, Pressure-balanced, ANSI Class 125. Stem down to close. Equal percentage or Linear flow characteristic.									
VGF21_P25	2-1/2	65	70 (60)	10-7/8 (276)	4-3/16 (107)	7 (178)	–	3-1/2 (89)	3/4 (19)
VGF21_P30	3	80	115 (99)	11-3/4 (298)	5-7/8 (150)	7-1/2 (191)	–		
VGF21_P40	4	100	150 (129)	13-7/8 (352)	5-7/8 (150)	9 (229)	–	5-1/4 (133)	1-1/2 (38)
VGF21_P50	5	125	285 (245)	15-3/4 (400)	6-1/8 (156)	10 (254)	–		
VGF21_P60	6	150	370 (318)	17-3/4 (451)	6-1/8 (156)	11 (279)	–		
3-way Mixing valves, ANSI Class 125. Stem up to close A-AB.									
VGF31EM25	2-1/2	65	70 (60)	10-7/8 (276)	3-15/16 (100)	7 (178)	3-3/4 (95)	4-3/16 (107)	3/4 (19)
VGF31EM30	3	80	120 (103)	11-3/4 (298)	3-15/16 (100)	7-1/2 (191)	4-3/8 (111)		
VGF31EM40	4	100	150 (129)	13-7/8 (352)	5-8/16 (140)	9 (229)	5-1/8 (130)	6-11/16 (170)	1-1/2 (38)
VGF31EM50	5	125	320 (275)	15-3/4 (400)	5-3/8 (137)	10 (254)	5-3/4 (146)		
VGF31EM60	6	150	370 (318)	17-3/4 (451)	5-11/16 (145)	11 (279)	6-5/8 (168)		
3-way Mixing valves, ANSI Class 250. Stem up to close A-AB.									
VGF32EM25	2-1/2	65	70 (60)	11-1/2 (292)	4-3/8 (112)	7-1/2 (191)	3-3/4 (95)	4-3/16 (107)	3/4 (19)
VGF32EM30	3	80	115 (99)	12-1/2 (318)	6-3/8 (161)	8-1/4 (210)	4-3/8 (111)		
VGF32EM40	4	100	170 (146)	14-1/2 (368)	5-7/8 (150)	10 (254)	5-1/8 (130)	6-11/16 (170)	1-1/2 (38)
VGF32EM50	5	125	320 (275)	16-5/8 (422)	6-3/16 (157)	11 (279)	5-3/4 (146)		
VGF32EM60	6	150	370 (318)	18-5/8 (473)	6-3/16 (157)	12-1/2 (318)	6-5/8 (168)		
3-way Diverting valves, ANSI Class 125. Stem down to close AB-A.									
VGF31LD25	2-1/2	65	70 (60)	10-7/8 (276)	3-15/16 (100)	7 (178)	3-3/4 (95)	4-3/16 (107)	3/4 (19)
VGF31LD30	3	80	120 (103)	11-3/4 (298)	3-15/16 (100)	7-1/2 (191)	4-3/8 (111)		
VGF31LD40	4	100	160 (138)	13-7/8 (352)	5-8/16 (140)	9 (229)	5-1/8 (130)	6-11/16 (170)	1-1/2 (38)
VGF31LD50	5	125	285 (245)	15-3/4 (400)	5-3/8 (137)	10 (254)	5-3/4 (146)		
VGF31LD60	6	150	380 (327)	17-3/4 (451)	5-11/16 (145)	11 (279)	6-5/8 (168)		
3-way Diverting valves, ANSI Class 250. Stem down to close AB-A.									
VGF32LD25	2-1/2	65	70 (60)	11-1/2 (292)	4-3/8 (112)	7-1/2 (191)	3-3/4 (95)	4-3/16 (107)	3/4 (19)
VGF32LD30	3	80	120 (103)	12-1/2 (318)	6-3/8 (161)	8-1/4 (210)	4-3/8 (111)		
VGF32LD40	4	100	160 (138)	14-1/2 (368)	5-7/8 (150)	10 (254)	5-1/8 (130)	6-11/16 (170)	1-1/2 (38)
VGF32LD50	5	125	285 (245)	16-5/8 (422)	6-3/16 (157)	11 (279)	5-3/4 (146)		
VGF32LD60	6	150	380 (327)	18-5/8 (473)	6-3/16 (157)	12-1/2 (318)	6-5/8 (168)		

[a] With stem fully down.

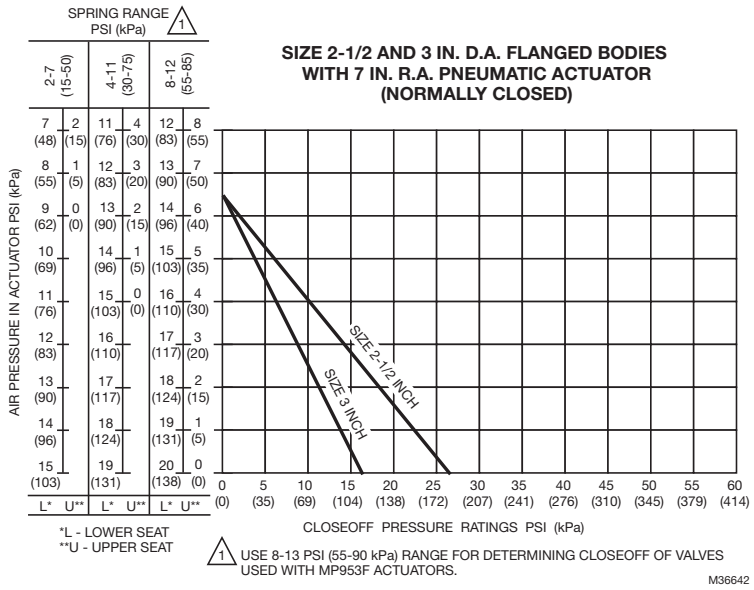

Fig. 5. Close-off pressures with 7 in. RA Pneumatic Actuator.

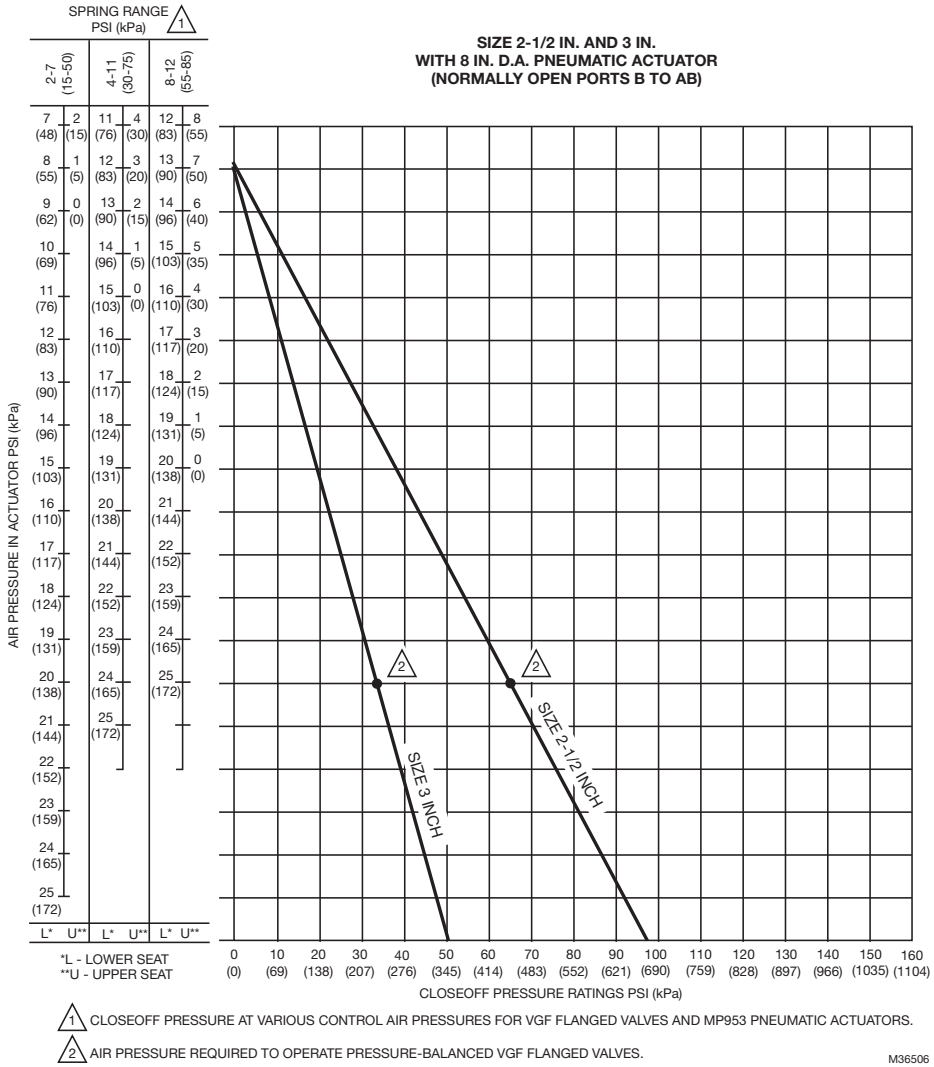

Fig. 6. Close-off pressures with 8 in. D.A. pneumatic actuators.

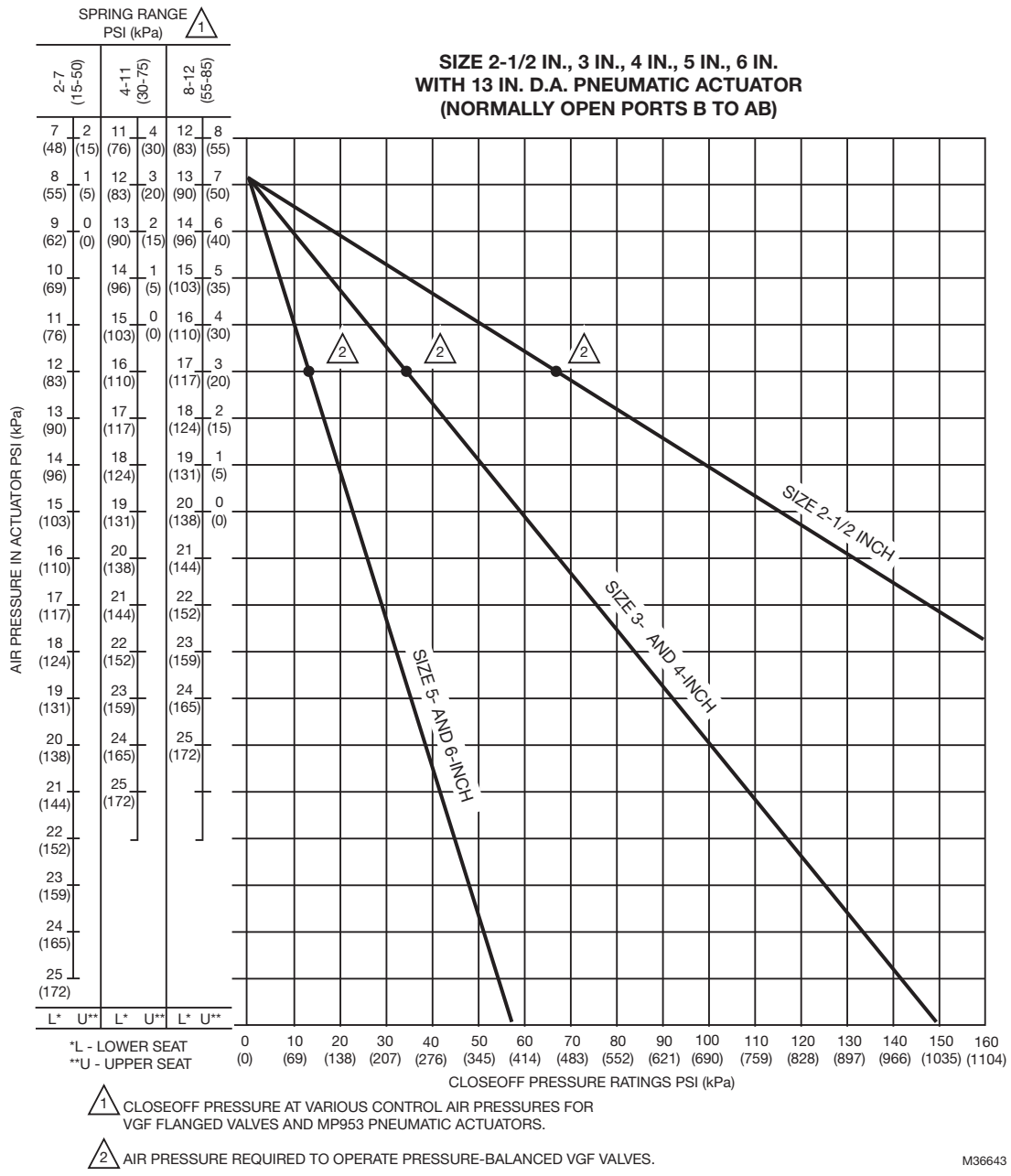

Fig. 7. Close-off pressures with 13 in. D.A pneumatic actuators.

INSTALLATION

When Installing this Product...

1. Read these instructions carefully. Failure to follow them could damage the product or cause a hazardous condition.
2. Check ratings given in instructions and on the product to ensure the product is suitable for your application.
3. Installer must be a trained, experienced service technician.
4. After installation is complete, check out product operation as provided in these instructions.

⚠ WARNING

Severe Burn Hazard.

Contact with hot liquid can lead to severe injury or cause death.

Release system pressure and isolate or drain the valve pipe section so the medium (steam, water or glycol solution) does not leak out of the valve body during installation (see Fig. 9).

⚠ CAUTION

Electrical Shock or Equipment Damage Hazard. Can shock individuals or short equipment circuitry.

Disconnect power supply to the actuator to prevent electrical shock and equipment damage, or remove and cap the air line to the actuator.

IMPORTANT

- *Before installing the valve, raise and lower the valve stem to make sure that the valve stem operates freely. Impaired stem operation can indicate that the stem was bent by rough handling. This condition can require replacing the valve.*
- *Protect the stem from damage due to bending or scratching.*

NOTES:

- Some non-pressure balanced valves have stem travel greater than the published 3/4 in. (20 mm) or 1-1/2 in. (38 mm) control stroke. This is due to use of bodies shared with pressure-balanced models.
- The first 3/4 inch (20mm) of the stroke is the control stroke of the 2-1/2 and 3 inch valves.
- The first 1-1/2 inch (38 mm) of stroke is the control stroke of the 4 to 6 inch valves.

Safety

The valves are to be installed by skilled personnel and in strict accordance with the installation instructions and local regulations. (See Fig. 8 for proper hoisting method.) Honeywell assumes no responsibility for damages or injuries resulting from non-compliance with installation instructions or standard good practice when mounting, operating, or maintaining the valves, even if not explicitly mentioned in the installation instructions. (See Fig. 10 for basic pipe orientation.) Observe all safety practices when working with steam systems.

Proper Use

These valves are only for use in cold, warm, hot water systems and for steam applications. They are designed for the medium temperature ranges listed in the specifications. They are to be operated with the appropriate Honeywell actuators only. Water should be properly filtered, treated and conditioned according to local conditions. The installation of a strainer is strongly recommended.

IMPORTANT

The presence of iron oxide (red rust) in the system voids the valve warranty. The use of rust inhibitors is recommended.

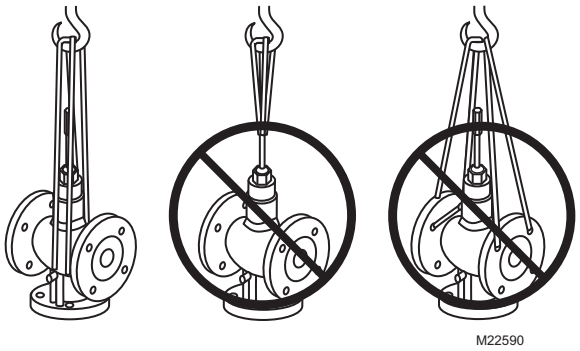

Fig. 8. Proper hoisting of VGF Valves.

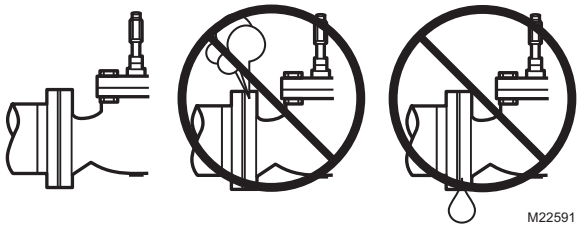

Fig. 9. Piping must prevent leakage.

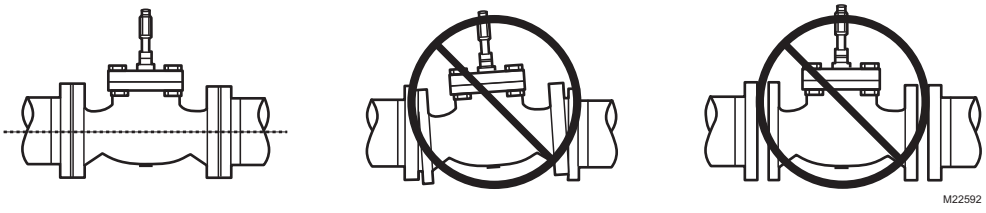

Fig. 10. Basic pipe orientation.

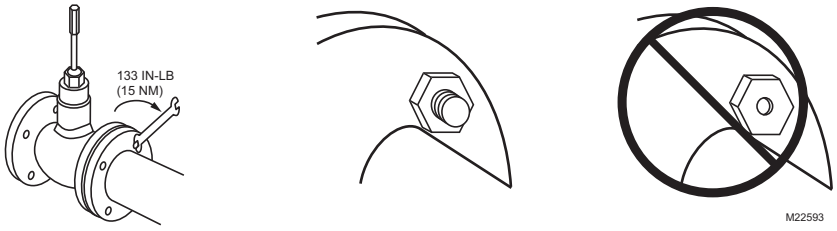

Fig. 11. Basic proper bolt length.

Location

Select a location where the valve and actuator are accessible. Allow sufficient space for servicing the valve and actuator. See Fig. 3 and 4 for valve body dimensions.

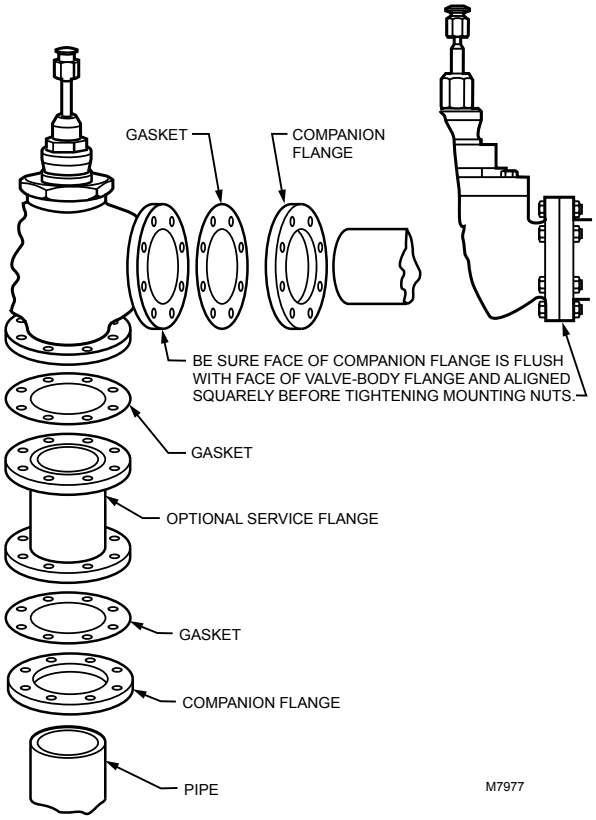

Fig. 12. Flanged valve body installation.

Mounting the Valve

See Fig. 12 for typical installation.

1. Hoist valve by its body only. Do not lift by stem, bonnet, flanges, or flange holes. (See Fig. 8.)
2. Install the valve so the flow follows the direction of the arrow indicated on the valve body.
3. Install the valve so the actuator is above the valve body. The valve can be installed in any position between vertical and horizontal. Do not install the valve with the stem below horizontal or upside down.
4. When controlling steam, use appropriate high temperature kit 43196000 and rotate valve body so that actuator is not positioned directly above the piping.
5. Use companion flanges with the same number of bolt holes and dimensions as the valve to be installed. (See Table 7.) Use standard cast-iron flanges for the two end ports.
6. Use a gasket material recommended for the medium to be handled.
7. Use mounting bolts long enough so the nuts can use the full length of the nut threads. (See Fig. 11.) Use bolts 1/8 in. smaller than the diameter of the bolt hole to allow clearance for installing. (See Fig. 12.)

Mounting Actuator

For information on mounting, refer to the Product Data literature for the actuator. It is important to have the correct actuator available for the installation. See Table 9 for recommended installation clearance from valve bonnet.

IMPORTANT

When using VGF valves with pneumatic MP953C and MP953E direct acting actuators, the following stroke limiting accessories are required to prevent over-travel and damage to the diaphragm. See Fig. 21:

- *VGF21ES25 - 272629A (stem collar, purchased separately)*
- *VGF21ES30 - 272629A (stem collar, purchased separately)*
- *VGF21LS25 - 272629A (stem collar, purchased separately)*
- *VGF21LS30 - 272629A (stem collar, purchased separately)*
- *VGF31EM25 - stem collar (provided with valve)*
- *VGF31EM30 - stem collar (provided with valve)*

Table 9. Installation Clearances (from Valve Bonnet).

Actuator	Minimum Vertical Clearance in in. (mm)
ML6420, ML7420	12-11/16 (322)
ML6421A, ML7421A	14-1/4 (360)
ML6421B, ML7421B	16-7/8 (430)
ML6425A,B; ML7425A,B	14-5/16 (364)
MN/MS Series + Q5020	12 (305)
Modutrol IV + Q5001	14-1/2 (369)
MP953C (8 inch dia)	11-7/8 (302)
MP953C (13 inch dia)	17-11/16 (449)
MP953E (8 inch dia)	16-1/2 (420)
MP953E (13 inch dia)	25-13/16 (655)
MN/MS Series + Q5024	18 (457)

CHECKOUT

For instructions for operating the valve actuator, see the Product Data sheet for the specific actuator.

1. Operate the control system and check valve operation to ensure the valve stem can position the valve smoothly through full stroke without binding.
2. Verify that the actuator fully closes the A port.
3. Perform the checkout tests included with the actuator instructions.

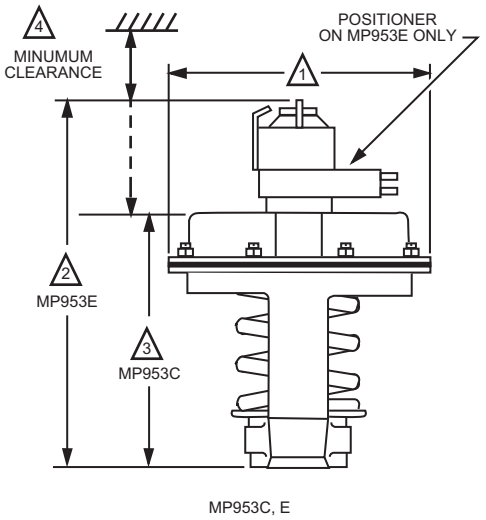

MP953C, E

OPERATION SIZE NOMINAL DIA	1	2	3	4
8-INCH	8-1/4 (210)	11-1/8 (283)	6-1/2 (165)	5-3/8 (137)
13-INCH	13-1/2 (343)	18-1/8 (460)	10 (254)	7-11/16 (195)

M7993B

Fig. 13. MP953C–F Pneumatic Actuator dimensions in in. (mm).

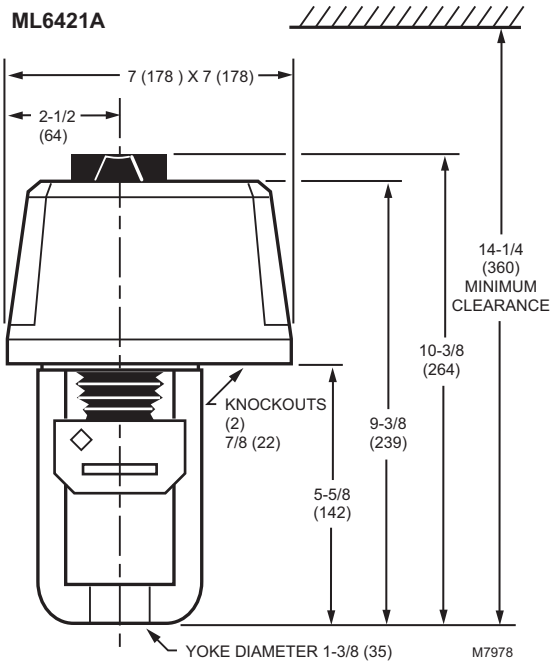

Fig. 14. ML6421A and ML7421A Actuator (use with 2-1/2 and 3 in. valves) dimensions in in. (mm).

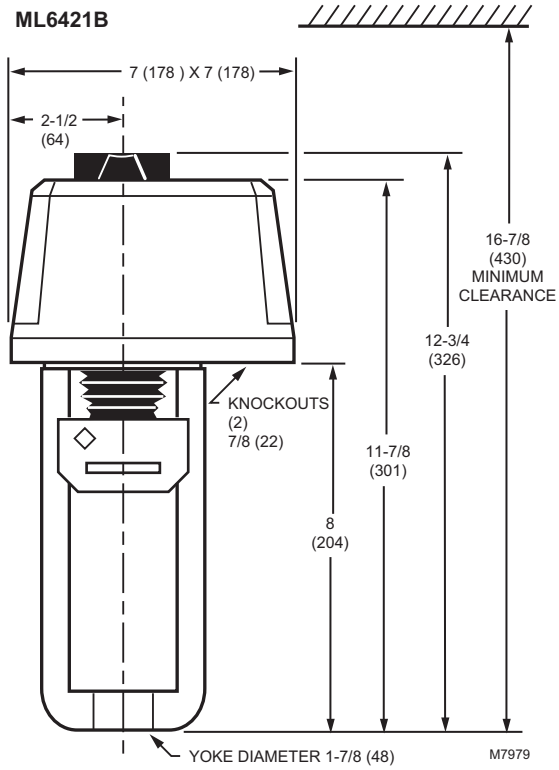

Fig. 15. ML6421B and ML7421B Actuator (use with 4, 5, and 6 in. valves) dimensions in in. (mm).

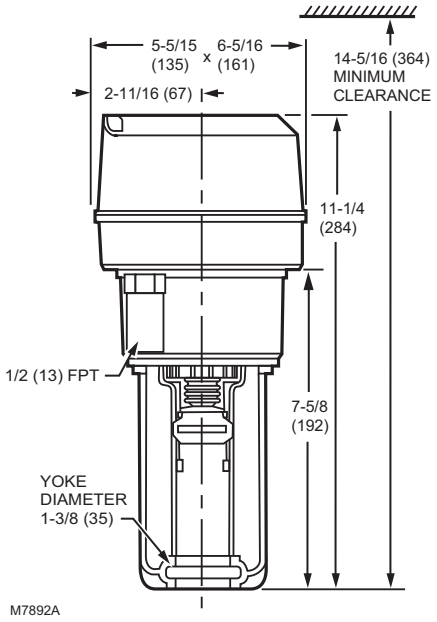

Fig. 16. ML6425A,B; ML7425A,B Actuator (use with 2-1/2 and 3 in. valves) dimensions in in. (mm).

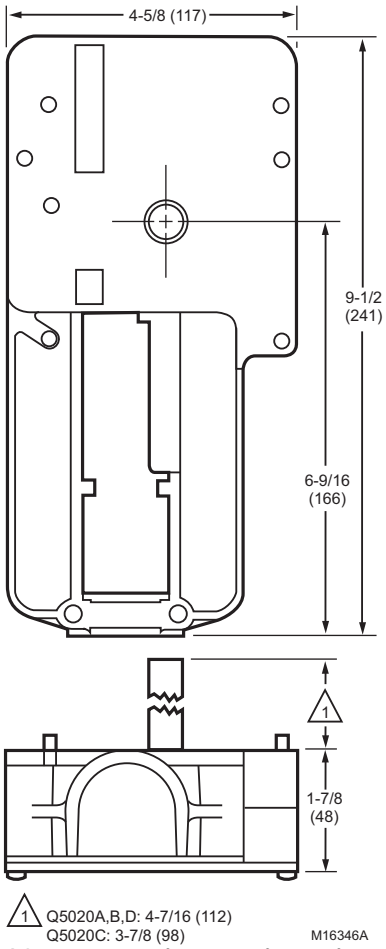

Fig. 17. Q5020 Actuator Linkage dimensions in in. (mm).

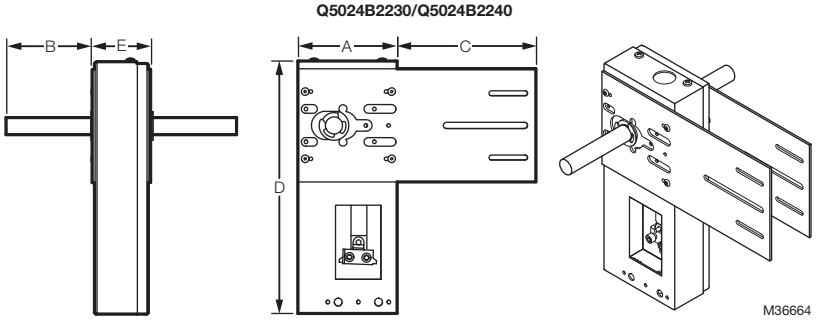

Linkage	A	B	C	D	E	Shaft Dia.
Q5024B2230 Q5024B2240	4-3/8”	4”	6”	11”	2-3/8”	19mm

Fig. 18. Q5024 Dimensions.

OPERATION

Two-Way Valves

Figs. 19 and 20 shows 2-way valves in the fully closed position.

Pressure-Balanced Valve (Fig. 19)

The pressure-balanced design combines close-off pressures comparable to a ball valve with traditional globe valve flow control accuracy in large valve body sizes.

The pressure-balanced valve seat includes a sealed pressure chamber. These valves operate as follows:

1. With the valve closed, pressure at the A port is present in the chamber that forms the upper section of the plug.
2. This equalizes the pressure above and below the seat.

NOTE: As the valve opens/closes, the chamber pressure equalizes in either direction.

3. As a result, the pressure of the medium does not affect the ability of the actuator to open/close the valve. The valve actuator works against only pressure chamber seal friction.
4. This is particularly useful when the pressure of the medium undergoes significant variation.
5. Regardless of pressure variation, valve operation is relatively smooth throughout the travel of the stem.

NOTE: Both equal percentage (VGF21EP) and linear (VGF21LP) flow characteristics are offered.

Standard Plug Valve (Fig. 20)

These valves have a metal-to-metal seat. As these models share body castings with the pressure-balanced models, the full stroke of the valve stem can be greater than the control stroke dimension. (See dimension Y, in Table 8.) Dimension Y is measured from the closure of the A port. Honeywell actuators are constructed to this Y dimension, and limit stem travel accordingly.

Flow does not increase with stem travel greater than 3/4 in. (20 mm) in 2-1/2 and 3 in. valves,

IMPORTANT

All VGF valves reference their flow and stroke to the A port; actuators must be configured to provide positive closure of this port.

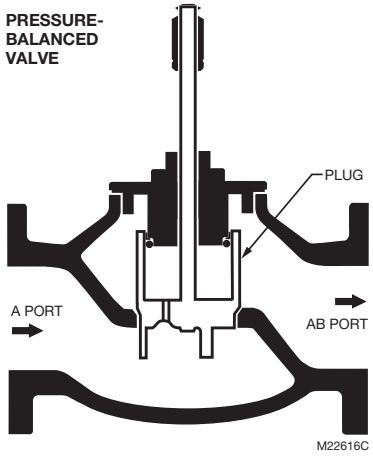

Fig. 19. Two-way pressure-balanced valve operation.

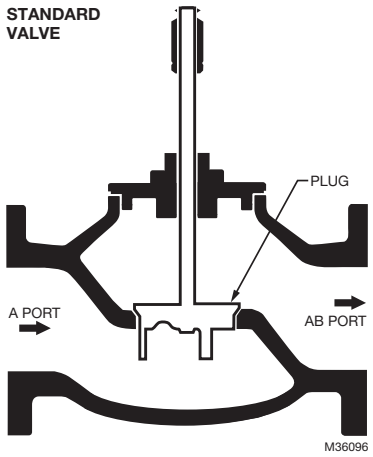

Fig. 20. Two-way standard valve operation.

Three-Way Valves

Figs. 21 and 22 show 3-way valves in the fully closed position, with no flow between the A port and AB port.

ELECTRIC CONTROL

Upon power failure:

- Spring return actuators return the valve to its normal position. This position (open or closed to the A or the B port) depends on the actuator installation.
- Non-spring return actuators hold the last commanded position.

PNEUMATIC CONTROL

Upon loss of control air pressure:

- The actuator returns the valve to its normal position. This position (open or closed to the A or the B port) depends on the actuator model.

Mixing Valve (Fig. 21)

- As the stem moves downward:
  - Flow from port B to AB decreases linearly.
  - Flow from port A to AB increases at an equal percentage rate.
- As the valve stem moves upward:
  - Flow from port B to AB increases.
  - Flow from port A to AB decreases.

NOTE: The B port seat of the VGF3_EM valves is constructed as a cage, not as a seat, and moves through the B port. It does not offer tight close-off. For leakage specifications, see Table 4. B port flow is at a minimum when stem travel down is 3/4 in. (20 mm) in 2-1/2 and 3 in. mixing valves.

OUTDOOR RESET CONTROL (FIG. 24)
- Connect the A port to a boiler output.
- Connect the B port to the system return.

AIR HANDLING APPLICATIONS (FIG. 23)
- Connect the A port to the output of a coil.
- Connect the B port to the coil bypass.

BOILER/CHILLER BYPASS (FIG. 25)
- VGF mixing valves are not recommended for boiler or chiller bypass due to B port close-off ratings. Use diverting model instead.

IMPORTANT

VGF Mixing Valves are assembled through the lower (B) port. The B port stop collar (see Fig. 21) holds the stem and plug assembly in the bonnet. Ensure the stem remains raised while servicing the valve or installing stem extensions. The stem collar provides a hard stop for direct-acting MP953 pneumatic actuators, and should not be removed.

Note that the full stroke of the valve stem can be greater than the control stroke dimension, Y, in Table 8, which is measured from the closure of the A port. Honeywell actuators are constructed for this Y dimension, and limit stem travel appropriately.

DIVERTING VALVE (FIG. 22)
- As the valve stem moves downward:
  - Flow from port AB to A decreases linearly.
  - Flow from port AB to B increases linearly.
- As the valve stem moves upward:
  - Flow from port AB to A decreases.
  - Flow from port AB to B increases.

OUTDOOR RESET CONTROL (FIG. 25)
- Connect the A port to the building supply.
- Connect the B port to the boiler return.

AIR HANDLING APPLICATIONS (FIG. 26)
- Connect the A port to the coil supply.
- Connect the B port to the system return.

NOTE: The A and B connections may be reversed when using pneumatic actuators.

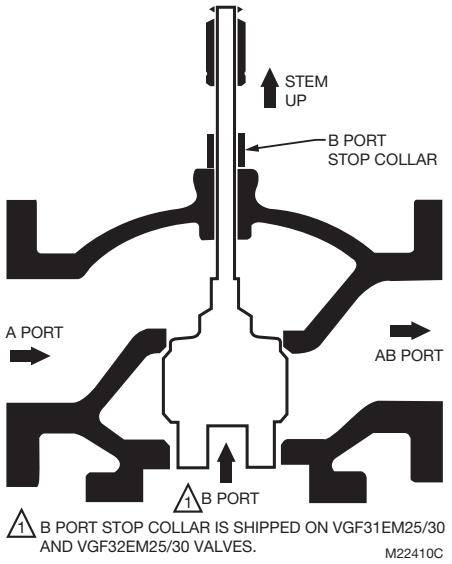

Fig. 21. VGF31EM mixing valve operation.

NOTE: B port stop collar is shipped on VGF31EM25/30 and VGF32EM25/30 valves.

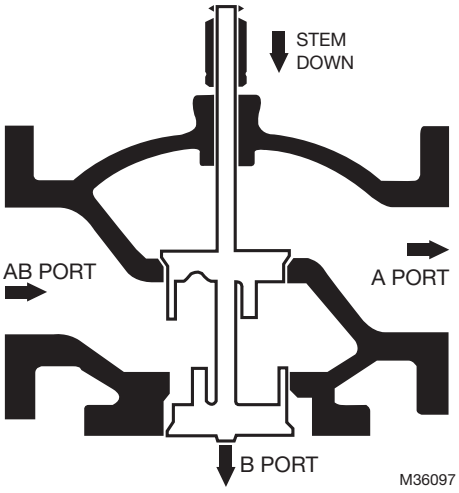

Fig. 22. VGF31LD diverting valve operation.

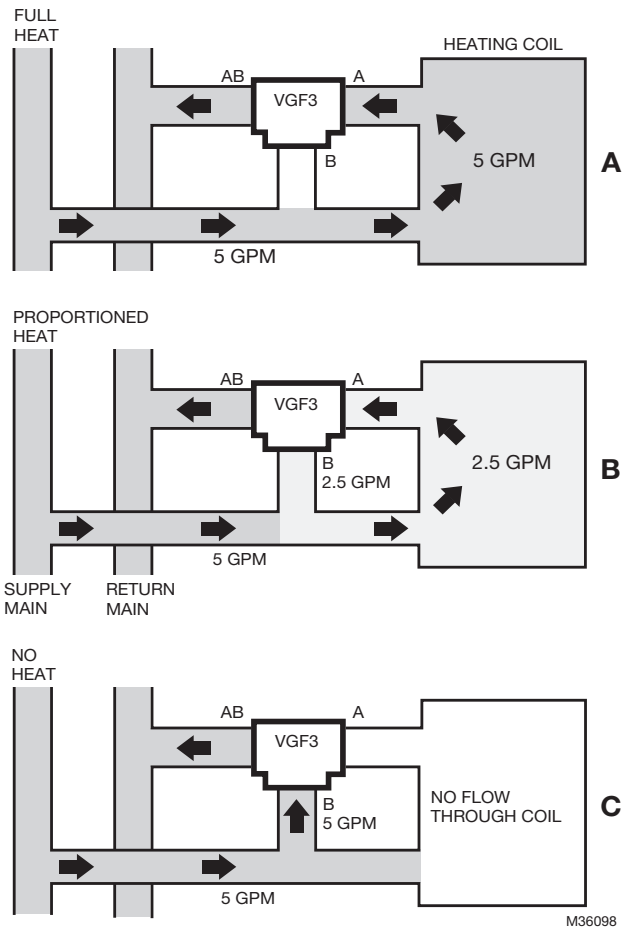

Fig. 23. Three-way mixing valve operation with coil bypass.

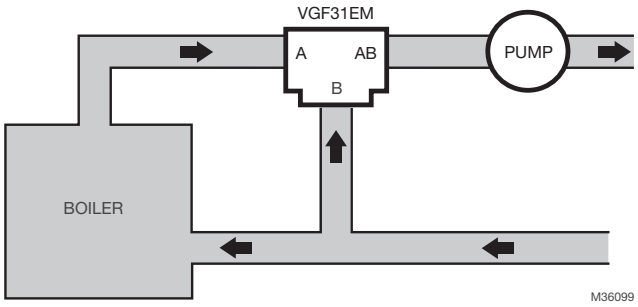

Fig. 24. Supply mixing for reset control.

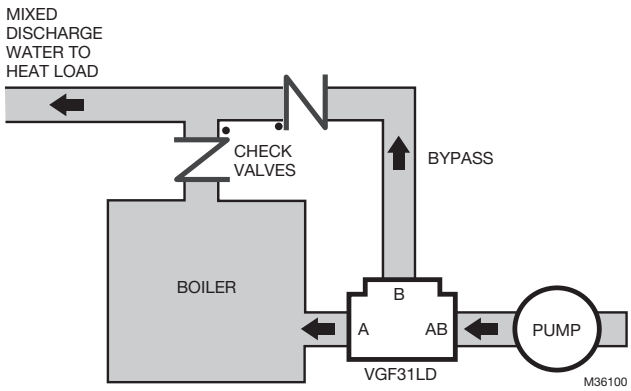

Fig. 25. Boiler bypass for reset control.

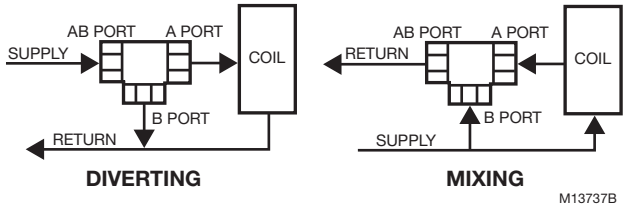

Fig. 26. Three-way valve flow orientation.

CHECKOUT AND TROUBLESHOOTING

Actuators

NOTE: For valve actuator operation instructions, see the Product Data sheet for the specific actuator.

1. Operate the control system and check valve operation to ensure the valve stem can position the valve smoothly through full stroke without binding.
2. Verify that the actuator fully closes the A port.
3. Perform the checkout tests included with the actuator instructions.

Table 10. VGF Valve Checkout and Troubleshooting.

Topic	Information
Valve does not move freely	• Possible cause: Contamination. Over time, scale, rust, magnetite, sand, and silt can cause wear of valve components. • The presence of suspended rust in a hydronic system voids most industry warranties. • Appropriate system flushing, filtration, and chemical treatment are required to maintain proper operating conditions. • Boiler and chiller manufacturers publish water quality guidelines. Specific conditioning regimens depend on system.
Valve Leak-by	• Damage to the plug or seat caused by particulate, wire draw, or steam corrosion requires valve replacement.
Valve stem leaks	• Replace the stem packing using the matching repacking kit. (See the Specifications section for the proper accessory.) • If the valve stem is bent, the valve must be replaced.
Improper Control	• Pressure drop across the valve must be at least as great as the pressure drop across the controlled load. If not, valve authority and control span are reduced. • If necessary, use pipe transitions in order to use a valve body with the proper Cv rating. Transition should be installed approximately 6 pipe diameters from valve.
Noisy Valve	• Limit differential pressure across valve seats to 20 psi. • This recommendation is independent of published close-off ratings.
Actuator Failure in Steam Applications	• Take care not to exceed valve temperature ratings. This can result in damage not covered by the Honeywell limited warranty. • To protect actuators from excess heat, orient the valve so the actuator is not directly over the piping, and/or use a 43196000 High Temperature Kit.

TYPICAL SPECIFICATIONS

Valve housing shall consist of cast iron and shall be ANSI-rated to withstand the pressures and temperatures encountered. Automatic control valves shall have flanged fittings, 2-1/2 in. through 6 in. size.

Valves shall have stainless steel plugs, seats, and stems, and be constructed with replaceable spring-loaded reinforced carbon-filled Teflon packing.

Straight through and diverting valves shall have a maximum seat leakage rate of 0.05% Cv at the control port and shall have 50:1 rangeability or better. Pressure-balanced valves shall have a maximum seat leakage rate of 0.01% at 175 psi differential pressure.

All valves shall be provided with either linear or equal percentage contoured throttling plugs for water, glycol-water, or steam service. Three-way valves shall be available in either mixing or diverting configurations.

Valves shall be manufactured by the same company that manufactures the direct coupled linear valve actuators or linkages and rotary actuators.

Home and Building Technologies
In the U.S.:
Honeywell
1985 Douglas Drive North
Golden Valley, MN 55422-3992
customer.honeywell.com

Honeywell

® U.S. Registered Trademark
© 2016 Honeywell International Inc.
63-2618—01 M.S. Rev. 12-16
Printed in United States