ABB BALDOR RELIANCE

Customer information packet

M3534

.33HP, 1730RPM, 3PH, 60HZ, 56, 3413M, TEFC, F1
Class - None
Division - Not Applicable

Copyright © All product information within this document is subject to ABB Motors and Mechanical Inc. copyright © protection, unless otherwise noted.
11/5/2026 4:06:41 PM

Specifications

Enclosure	TEFC
Frame	56
Frame Material	Steel
Frequency	60.00 Hz
Haz Area Class and Group	None
Haz Area Division	Not Applicable
Motor Letter Type	Three Phase
Output @ Frequency	.330 HP @ 60 HZ
Phase	3
Synchronous Speed @ Frequency	1800 RPM @ 60 HZ
Voltage @ Frequency	230.0 V @ 60 HZ
	460.0 V @ 60 HZ
Agency Approvals	C UR US
Ambient Temperature	40 °C
Auxiliary Box	NO AUXILLARY BOX
Auxiliary Box Lead Termination	None
Base Indicator	Rigid
Bearing Grease Type	Polyrex EM (-20F +300F)
Blower	None
Current @ Voltage	1.400 A @ 230.0 V
	1.300 A @ 208.0 V
	.700 A @ 460.0 V
Design Code	B
Drip Cover	No Drip Cover
Duty Rating	CONT
Efficiency @ 100% Load	68.0 %
Electrically Isolated Bearing	Not Electrically Isolated
Feedback Device	NO FEEDBACK
Front Shaft Indicator	None
Heater Indicator	No Heater
High Voltage Full Load Amps	0.7 a
Insulation Class	B

Part Detail

Revision	C
Type	AC
Mech. spec.	34-1169
Base	
Status	PRD/A
Elec. spec.	34WGR709
Layout	34LY1169
Eff. date	11-06-2024
CD Diagram	CD0005
Poles	04
Leads	9#18
Proprietary	False
Created date	02-05-2021

Inverter Code	Not Inverter
KVA Code	L
Lifting Lugs	No Lifting Lugs
Locked Bearing Indicator	No Locked Bearing
Motor Lead Quantity/Wire Size	9 @ 18 AWG
Motor Lead Termination	Flying Leads
Motor Standards	NEMA
Motor Type	3413M
Mounting Arrangement	F1
Number of Poles	4
Overall Length	11.35 IN
Power Factor	66
Product Family	General Purpose
Pulley End Bearing Type	Ball
Pulley Face Code	Standard
Pulley Shaft Indicator	Standard
Rodent Screen	None
Service Factor	1.35
Shaft Diameter	0.625 IN
Shaft Ground Indicator	No Shaft Grounding
Shaft Rotation	Reversible
Shaft Slinger Indicator	No Slinger
Speed	1730 rpm
Speed Code	Single Speed
Starting Method	Direct on line
Thermal Device - Bearing	None
Thermal Device - Winding	None
Vibration Sensor Indicator	No Vibration Sensor
Winding Thermal 1	None
Winding Thermal 2	None

Nameplate

NP1256L									
CAT.NO.	M3534								
SPEC.	34-1169R709								
HP	.33								
VOLTS	230/460								
AMP	1.4/.7								
RPM	1730								
FRAME	56	**HZ**	60			**PH**	3		
SER.F.	1.35	**CODE**	L	**DES**	B	**CLASS**	B		
NEMA-NOM-EFF	68	**PF**	66						
RATING	40C AMB-CONT								
CC									
DE	6203	**ODE**	6203						
ENCL	TEFC	**SN**							
	SFA 1.6/.8								

Accessories

Part number	Description	Multiplier
34-171	C FACE KIT	A8

AC Induction Motor Performance Data
Record # 85527
Preliminary Data Sheet

Winding: 34WGR709-R001	**Type:** 3413M	**Enclosure:** TEFC

Nameplate Data			
Rated Output (HP)			.33
Volts			230/460
Full Load Amps			1.4/0.7
R.P.M.			1725
Hz	60	**Phase**	3
NEMA Design Code	B	**KVA Code**	L
Service Factor (S.F.)			1.35
NEMA Nom. Eff.	67	**Power Factor**	66
Rating - Duty			40C AMB-CONT
S.F. Amps			1.6/0.8

460 V, 60 Hz: High Voltage Connection	
Full Load Torque	1 LB-FT
Start Configuration	direct on line
Breakdown Torque	3.5 LB-FT
Pull-up Torque	2.13 LB-FT
Locked-rotor Torque	2.72 LB-FT
Starting Current	3.93 A
No-load Current	0.6 A
Line-line Res. @ 25ºC	70.9 Ω
Temp. Rise @ Rated Load	51°C
Temp. Rise @ S.F. Load	67°C
Locked-rotor Power Factor	82
Rotor inertia	0.031 lb-ft²

Load Characteristics 460 V, 60 Hz, 0.33 HP

% of Rated Load	**25**	**50**	**75**	**100**	**125**	**150**	**S.F.**
Power Factor	33	46	57	67	69	81	77
Efficiency	38.6	55.6	63.2	67.3	68.7	67.2	68.7
Speed	1779	1764	1749	1731	1712	1691	1697
Line amperes	0.6	0.62	0.65	0.7	0.76	0.85	0.81

ABB Motors and Mechanical Inc.

WINDING # 34WGR709

0.33 HP 3 PH 60 HZ 1725 RPM 460 V 3413M

Typical performance - not guaranteed values.

TORQUES(LB-FT): PO=3.5 PU=2.13 LR=2.72 LRA=3.93

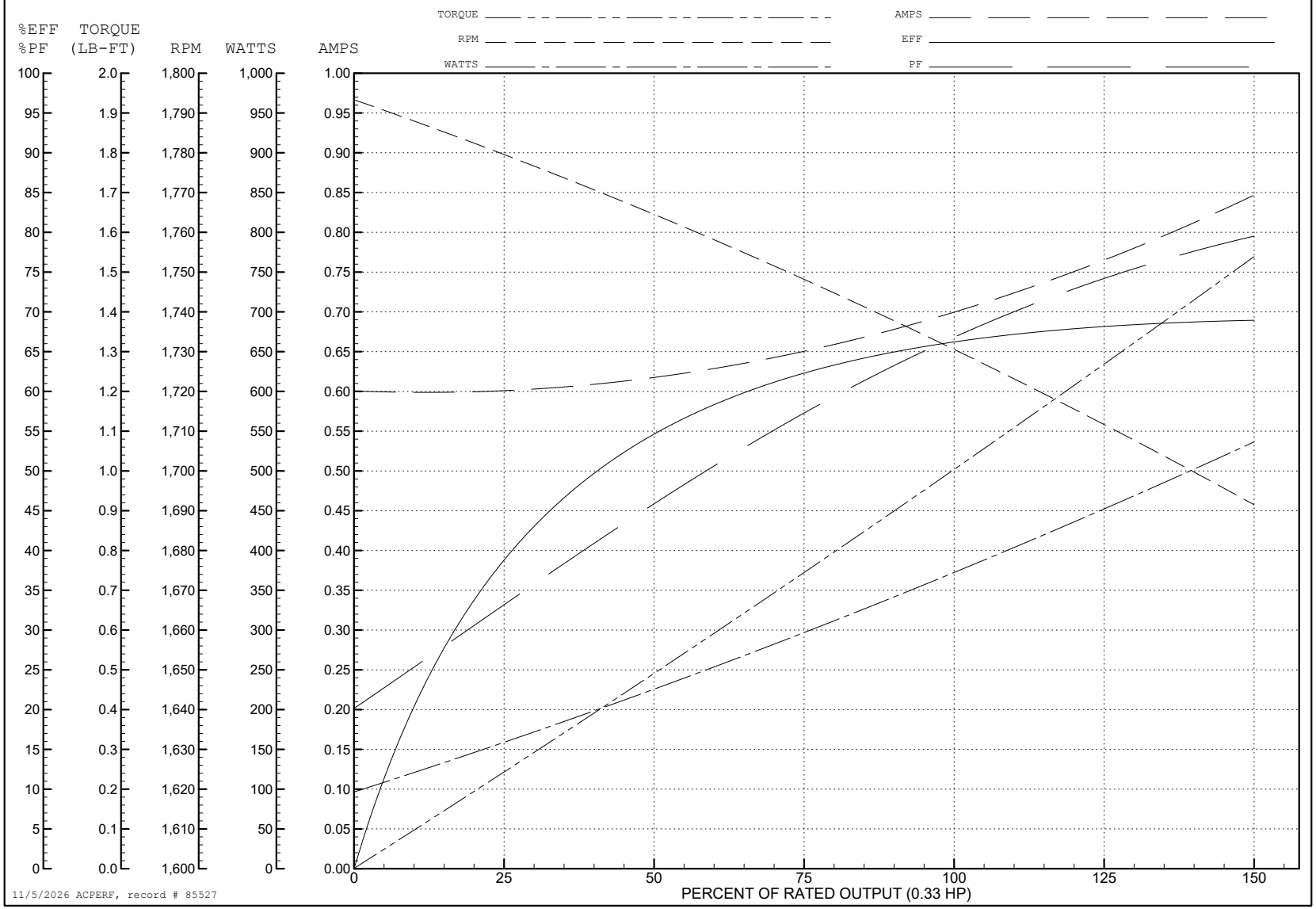

34LY1169

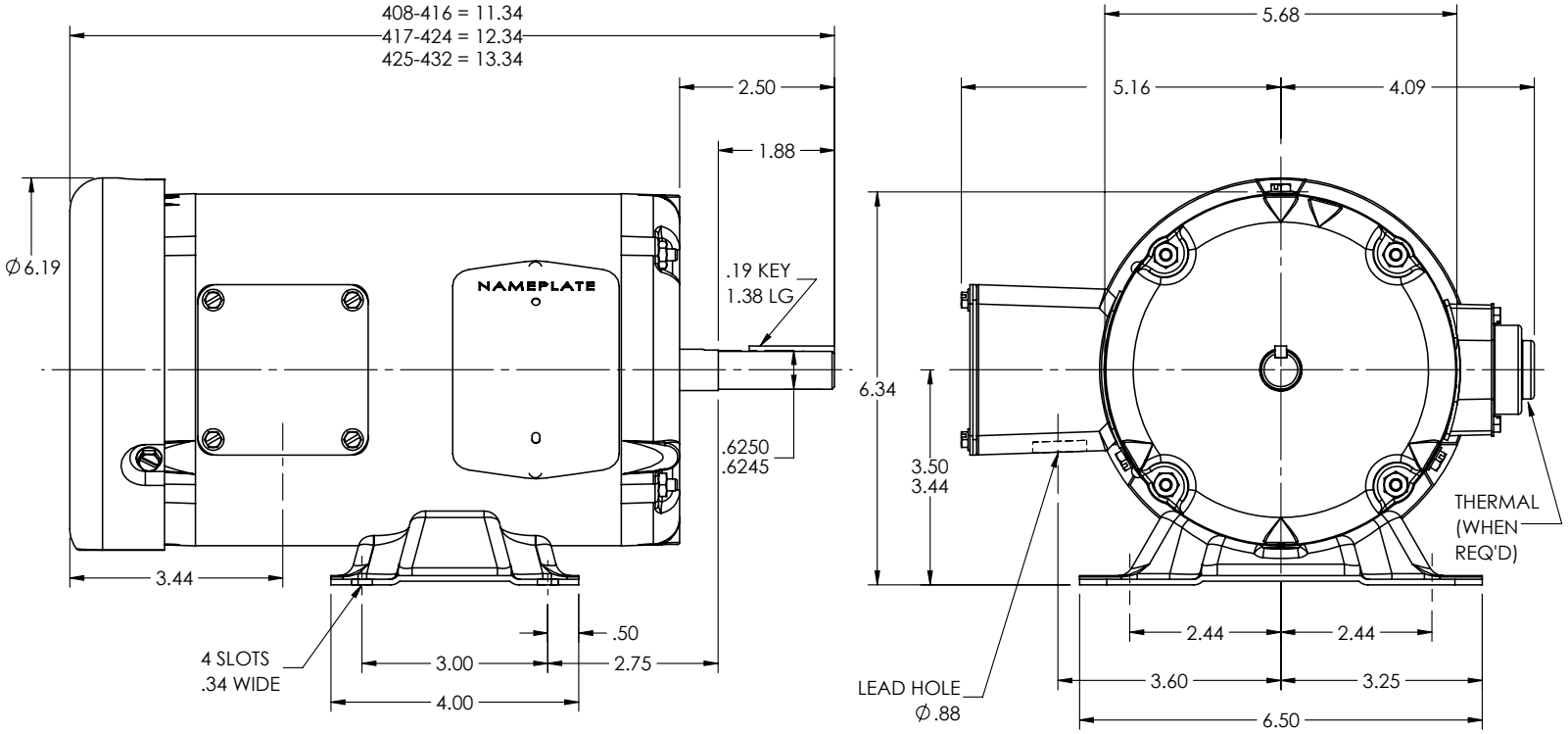

CUSTOMER IS RESPONSIBLE FOR DETERMINING THAT THE PRODUCT WILL PERFORM SUITABLY IN THE INTENDED APPLICATION

REV. DESC: LOAD TO SOLIDWORKS			
REV: F	VERSION: 02	REVISED: 10:55:39 04/21/2023	TDR: 000001194274
34LY1169	MODEL NO. 34LY1169		REF: -
	BY: ENFRAJ0		

BALDOR - RELIANCE®

STD HORZ MODEL 34M NEMA 56 TEFC

34LY1169

CD0005

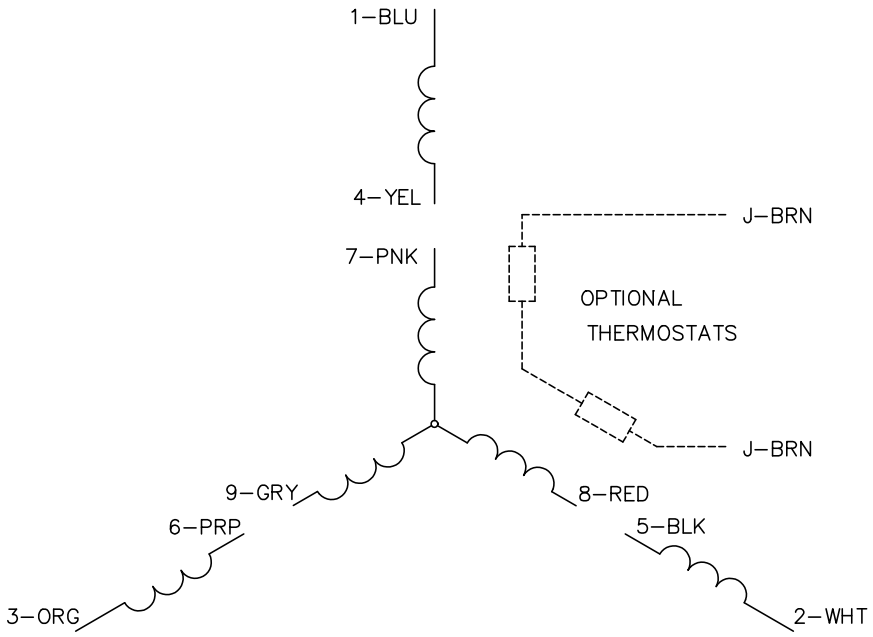

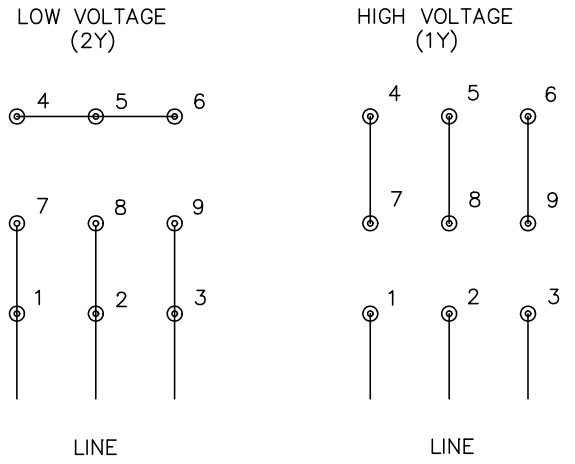

NOTES:

1. INTERCHANGE ANY TWO LINE LEADS TO REVERSE ROTATION.
2. OPTIONAL THERMOSTATS ARE PROVIDED WHEN SPECIFIED.
3. ACTUAL NUMBER OF INTERNAL PARALLEL CIRCUITS MAY BE A MULTIPLE OF THOSE SHOWN ABOVE.
4. LEAD COLORS ARE OPTIONAL. LEADS MUST ALWAYS BE NUMBERED AS SHOWN.

CD0005

REV. DESC: REVISE TO SHOW OPTIONAL COLORS			BALDOR ELECTRIC Co.
REV. LTR: E	BY: JLP	REVISED: 01/19/99 10:15	TDR: 0171435
CD0005		FILE: AAA00005140	MDL: –
		MTL: –	3PH, DV, 9 LEADS