ABB BALDOR RELIANCE

Customer information packet

ECR9306T

30HP, 1180RPM, 3PH, 60HZ, 326T, 1272M, TEFC, F1
Class - None
Division - Not Applicable

Copyright © All product information within this document is subject to ABB Motors and Mechanical Inc. copyright © protection, unless otherwise noted.
11/5/2026 2:17:20 PM

Specifications

Enclosure	TEFC
Frame	326T
Frame Material	Iron
Frequency	60.00 Hz
Haz Area Class and Group	None
Haz Area Division	Not Applicable
Motor Letter Type	Three Phase
Output @ Frequency	30.000 HP @ 60 HZ
Phase	3
Synchronous Speed @ Frequency	1200 RPM @ 60 HZ
Voltage @ Frequency	460.0 V @ 60 HZ
	230.0 V @ 60 HZ
Agency Approvals	CCSA US
	CSA EEV
	NEMA PREMIUM
	NEMA_PREMIUM
	UR
Ambient Temperature	40 °C
Auxiliary Box	NO AUXILLARY BOX
Auxiliary Box Lead Termination	None
Base Indicator	Rigid
Bearing Grease Type	Polyrex EM (-20F +300F)
Blower	None
Constant Torque Speed Range	6
Current @ Voltage	90.000 A @ 208.0 V
	84.000 A @ 230.0 V
	42.000 A @ 460.0 V
Design Code	A
Drip Cover	No Drip Cover
Duty Rating	CONT
Efficiency @ 100% Load	93.0 %
Electrically Isolated Bearing	Not Electrically Isolated

Part Detail

Revision	S
Type	AC
Mech. spec.	12H518
Base	
Status	PRD/A
Elec. spec.	12WGY876
Layout	12LYH518
Eff. date	10-16-2025
CD Diagram	CD0005
Poles	06
Leads	9#8
Proprietary	False
Created date	01-07-2015

Feedback Device	NO FEEDBACK
Front Face Code	Standard
Front Shaft Indicator	None
Heater Indicator	No Heater
High Voltage Full Load Amps	42.0 a
Insulation Class	F
Inverter Code	Inverter Duty
KVA Code	K
Lifting Lugs	Standard Lifting Lugs
Locked Bearing Indicator	Locked Bearing
Max Speed	1800 rpm
Motor Lead Exit	Ko Box
Motor Lead Quantity/Wire Size	9 @ 8 AWG
Motor Lead Termination	Flying Leads
Motor Standards	NEMA
Motor Type	1272M
Mounting Arrangement	F1
Number of Poles	6
Overall Length	30.66 IN
Power Factor	72
Product Family	Super-E Chemical Processing
Pulley End Bearing Type	Ball
Pulley Face Code	Standard
Pulley Shaft Indicator	Standard
Rodent Screen	None
Service Factor	1.25
Shaft Diameter	2.125 IN
Shaft Extension Location	Pulley End
Shaft Ground Indicator	No Shaft Grounding
Shaft Rotation	Reversible
Shaft Slinger Indicator	Shaft Slinger
Speed	1180 rpm
Speed Code	Single Speed
Starting Method	Direct on line

Thermal Device - Bearing	None
Thermal Device - Winding	None
Vibration Sensor Indicator	No Vibration Sensor
Winding Thermal 1	None
Winding Thermal 2	None

Nameplate

NP3293													
CAT.NO.	ECR9306T		**P/N**				**ENCLOSURE**	TEFC					
SPEC.	12H518Y876G1	**CC**	010A	**FRAME**	326T		**S/N**						
HP	30	**CLASS**	F	**HZ**	60	**DES**	A						
RPM	1180	**RPM MAX**	1800	**PH**	3	**KVA-CODE**	K						
VOLT	230/460			**I.P.**	55								
AMP	84/42		**SER.F.**	1.25	**PF**	72	**ODE BRG**	6312	**DE BRG**	6313			
RATING	40C AMB-CONT		**NEMA-NOM-EFF**	93	**GREASE**	POLYREX EM							
HTR-VOLTS	**HTR-AMPS**		**HTR-WATTS**		**INV.TYPE**								
	SFA 102/51												
			C HP FR	60	**C HP TO**	90							
			CT HZ FROM	6	**CT HZ TO**	60							
			MOTOR WEIGHT	560	**VT HZ FROM**	6	**VT HZ TO**	60					

AC Induction Motor Performance Data
Record # 50077
Typical performance - not guaranteed values

Winding: 12WGY876-R001	**Type:** 1272M	**Enclosure:** TEFC

Nameplate Data				**460 V, 60 Hz: High Voltage Connection**	
Rated Output (HP)			30	**Full Load Torque**	133 LB-FT
Volts			230/460	**Start Configuration**	direct on line
Full Load Amps			84/42	**Breakdown Torque**	484 LB-FT
R.P.M.			1180	**Pull-up Torque**	259 LB-FT
Hz	60	**Phase**	3	**Locked-rotor Torque**	307 LB-FT
NEMA Design Code	A	**KVA Code**	K	**Starting Current**	327 A
Service Factor (S.F.)			1.25	**No-load Current**	23.8 A
NEMA Nom. Eff.	93	**Power Factor**	72	**Line-line Res. @ 25ºC**	0.22 Ω
Rating - Duty			40C AMB-CONT	**Temp. Rise @ Rated Load**	53°C
S.F. Amps			102/51	**Temp. Rise @ S.F. Load**	71°C
				Locked-rotor Power Factor	27.8
				Rotor inertia	13.8 LB-FT2

Load Characteristics 460 V, 60 Hz, 30 HP

% of Rated Load	**25**	**50**	**75**	**100**	**125**	**150**	**S.F.**
Power Factor	32	52	65	72	76	79	76
Efficiency	85.7	91.3	92.9	93.4	92.9	92.6	92.9
Speed	1197	1194	1191	1188	1184	1180	1184
Line amperes	25.3	29.7	35.3	42	49.6	57.7	49.6

ABB Motors and Mechanical Inc.

WINDING # 12WGY876

30 HP 3 PH 60 HZ 1180 RPM 460 V 1272M

TORQUES(LB-FT): PO=484 PU=259 LR=307 LRA=327

Typical performance - not guaranteed values.

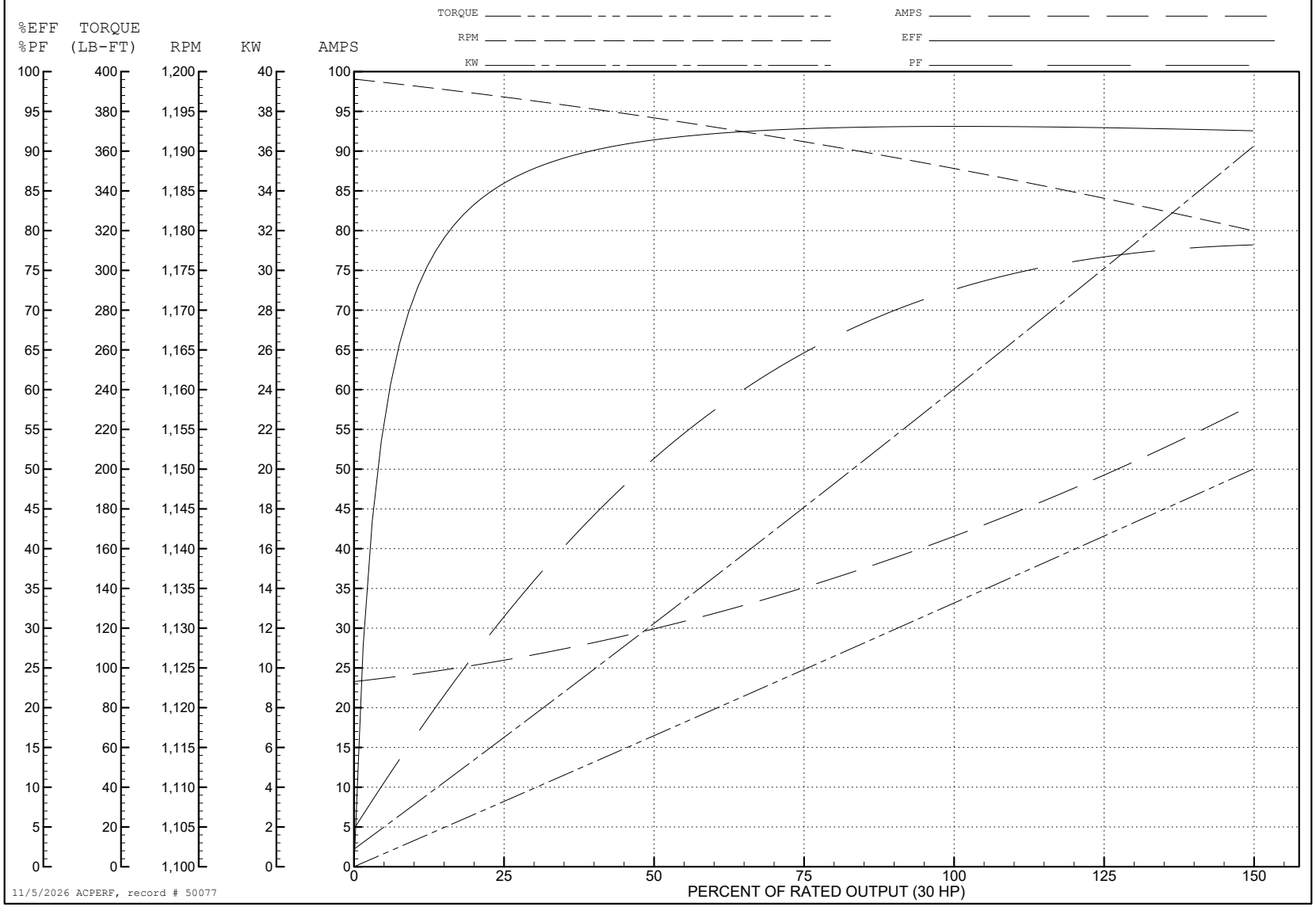

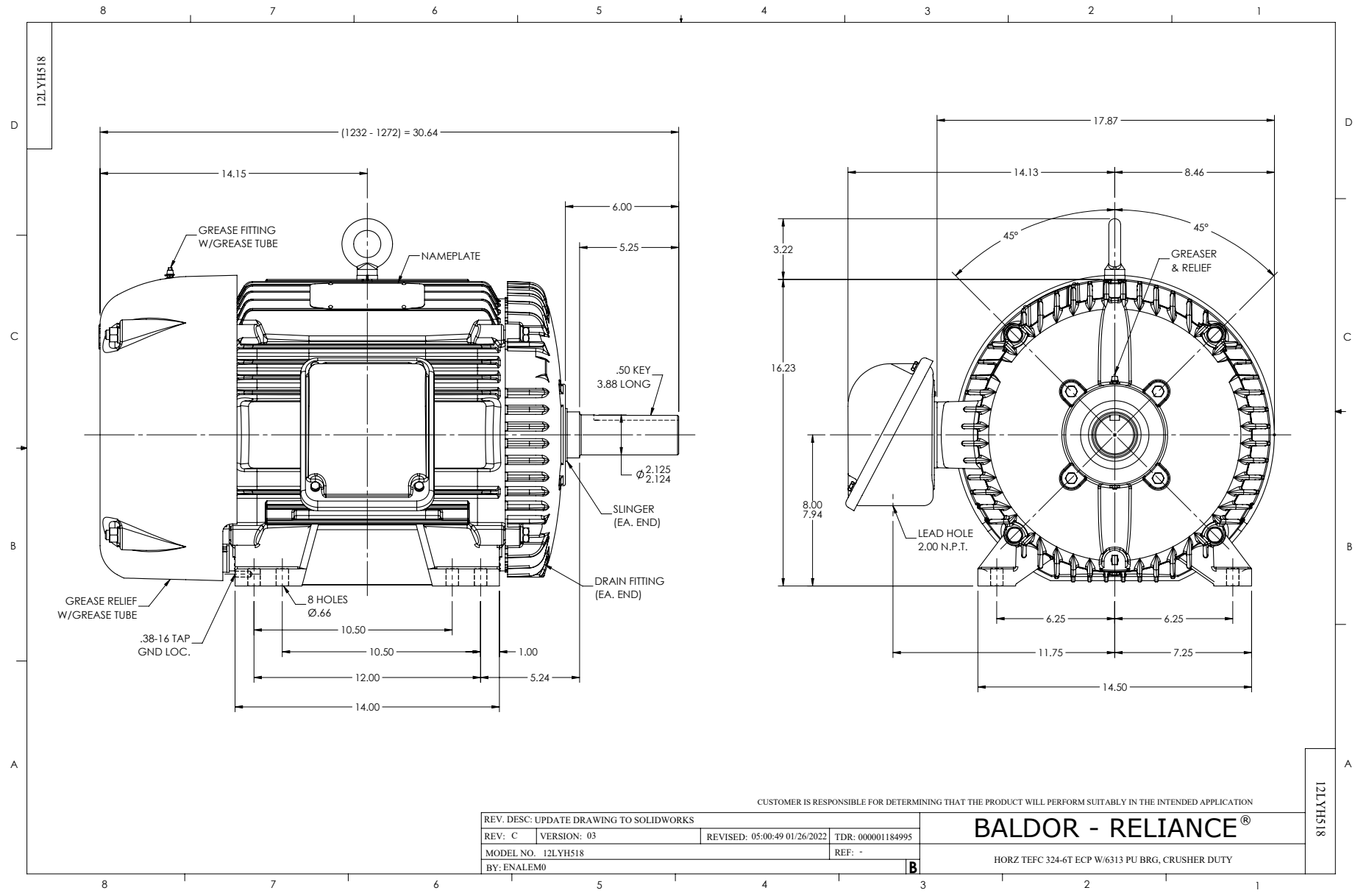
12LYH518
(1232 - 1272) = 30.64
14.15
6.00
5.25
GREASE FITTING
W/GREASE TUBE
NAMEPLATE
.50 KEY
3.88 LONG
Ø2.125
2.124
SLINGER
(EA. END)
DRAIN FITTING
(EA. END)
GREASE RELIEF
W/GREASE TUBE
.38-16 TAP
GND LOC.
8 HOLES
Ø.66
10.50
10.50
1.00
12.00
5.24
14.00
17.87
14.13
8.46
45°
45°
3.22
GREASER
& RELIEF
16.23
8.00
7.94
LEAD HOLE
2.00 N.P.T.
6.25
6.25
11.75
7.25
14.50
CUSTOMER IS RESPONSIBLE FOR DETERMINING THAT THE PRODUCT WILL PERFORM SUITABLY IN THE INTENDED APPLICATION
REV. DESC: UPDATE DRAWING TO SOLIDWORKS
REV: C
VERSION: 03
REVISED: 05:00:49 01/26/2022
TDR: 000001184995
MODEL NO. 12LYH518
REF: -
BY: ENALEM0
B
BALDOR - RELIANCE®
HORZ TEFC 324-6T ECP W/6313 PU BRG, CRUSHER DUTY
12LYH518

CD0005

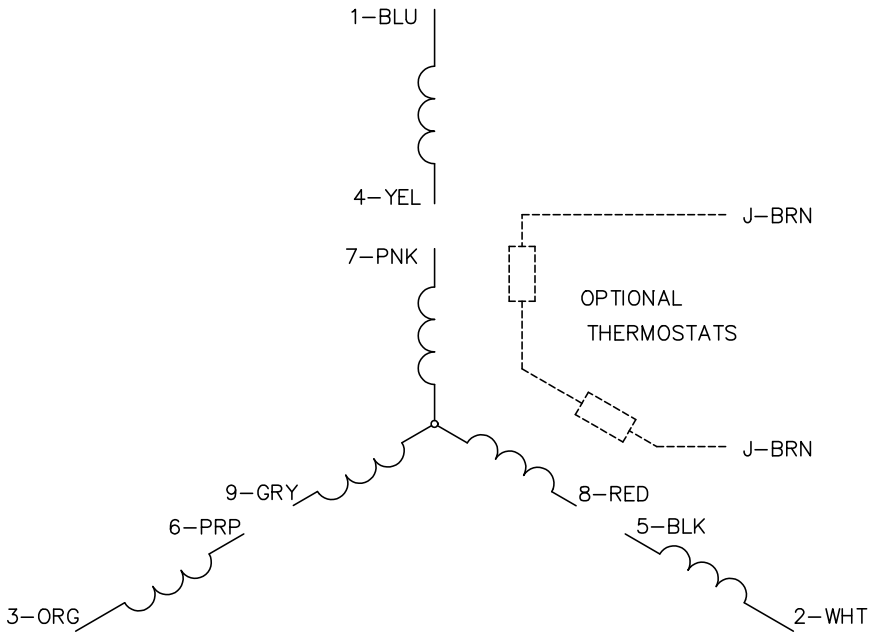

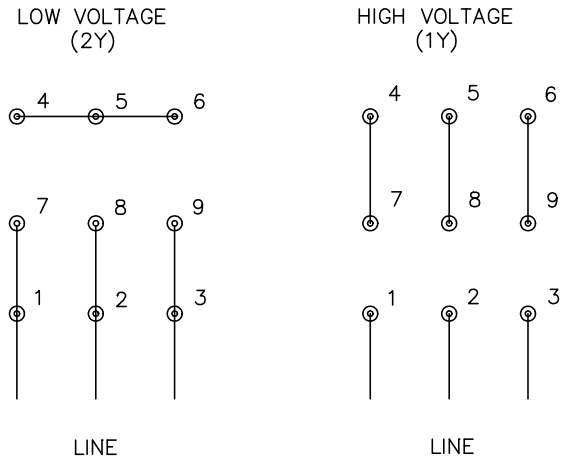

NOTES:

1. INTERCHANGE ANY TWO LINE LEADS TO REVERSE ROTATION.
2. OPTIONAL THERMOSTATS ARE PROVIDED WHEN SPECIFIED.
3. ACTUAL NUMBER OF INTERNAL PARALLEL CIRCUITS MAY BE A MULTIPLE OF THOSE SHOWN ABOVE.
4. LEAD COLORS ARE OPTIONAL. LEADS MUST ALWAYS BE NUMBERED AS SHOWN.

CD0005

REV. DESC: REVISE TO SHOW OPTIONAL COLORS			BALDOR ELECTRIC Co.
REV. LTR: E	BY: JLP	REVISED: 01/19/99 10:15	TDR: 0171435
CD0005		FILE: AAA00005140	MDL: –
		MTL: –	3PH, DV, 9 LEADS