ABB BALDOR RELIANCE

Customer information packet

CEM3583T

1.5HP, 3500RPM, 3PH, 60HZ, 143TC, 0520M, TEFC
Class - None
Division - Not Applicable

Copyright © All product information within this document is subject to ABB Motors and Mechanical Inc. copyright © protection, unless otherwise noted.
11/5/2026 4:01:05 PM

Specifications

Enclosure	TEFC
Frame	143TC
Frame Material	Iron
Frequency	60.00 Hz
Haz Area Class and Group	None
Haz Area Division	Not Applicable
Motor Letter Type	Three Phase
Output @ Frequency	1.500 HP @ 60 HZ
Phase	3
Synchronous Speed @ Frequency	3600 RPM @ 60 HZ
Voltage @ Frequency	460.0 V @ 60 HZ
	230.0 V @ 60 HZ
Agency Approvals	CURUSEEV
	NEMA PREMIUM
	NEMA PREMIUM (OLD LOGO)
Ambient Temperature	40 °C
Auxiliary Box	NO AUXILLARY BOX
Auxiliary Box Lead Termination	None
Base Indicator	Rigid
Bearing Grease Type	Polyrex EM (-20F +300F)
Blower	None
Current @ Voltage	3.800 A @ 230.0 V
	4.000 A @ 208.0 V
	1.900 A @ 460.0 V
Design Code	B
Drip Cover	No Drip Cover
Duty Rating	CONT
Efficiency @ 100% Load	84.0 %
Electrically Isolated Bearing	Not Electrically Isolated
Feedback Device	NO FEEDBACK
Front Face Code	Standard
Front Shaft Indicator	None

Part Detail

Revision	U
Type	AC
Mech. spec.	05C052
Base	
Status	PRD/A
Elec. spec.	05WGX102
Layout	05LYC052
Eff. date	04-29-2024
CD Diagram	CD0005
Poles	02
Leads	9#18
Proprietary	False
Created date	05-21-2010

Heater Indicator	No Heater
High Voltage Full Load Amps	1.9 a
Insulation Class	F
Inverter Code	Inverter Ready
KVA Code	L
Lifting Lugs	Standard Lifting Lugs
Locked Bearing Indicator	Locked Bearing
Motor Lead Exit	Ko Box
Motor Lead Quantity/Wire Size	9 @ 18 AWG
Motor Lead Termination	Flying Leads
Motor Standards	NEMA
Motor Type	0520M
Mounting Arrangement	F1
Number of Poles	2
Overall Length	13.04 IN
Power Factor	85
Product Family	General Purpose
Pulley End Bearing Type	Ball
Pulley Face Code	C-Face
Pulley Shaft Indicator	Standard
Rodent Screen	None
RoHS Status	ROHS COMPLIANT
Service Factor	1.15
Shaft Diameter	0.875 IN
Shaft Extension Location	Pulley End
Shaft Ground Indicator	No Shaft Grounding
Shaft Rotation	Reversible
Shaft Slinger Indicator	No Slinger
Speed	3500 rpm
Speed Code	Single Speed
Starting Method	Direct on line
Thermal Device - Bearing	None
Thermal Device - Winding	None
Vibration Sensor Indicator	No Vibration Sensor

Winding Thermal 1	None
Winding Thermal 2	None

Nameplate

NP3441LUA									
CAT.NO.	CEM3583T								
SPEC	05C052X102G1								
HP	1.5								
VOLTS	230/460								
AMPS	3.8/1.9								
RPM	3500								
FRAME	143TC	**HZ**	60			**PH**	3		
SF	1.15	**CODE**	L	**DES**	B	**CLASS**	F		
NEMA NOM. EFF	84	**PF**	85						
RATING	40C AMB-CONT								
CC	010A								
ENCL	TEFC	**SER**							
DE	6205	**ODE**	6203						
VPWM INVERTER READY									
CT6-60H(10:1)VT3-60H(20:1									
	50HZ 1.5HP 190/380V 4.6/2.3A								SF1.0

AC Induction Motor Performance Data
Record # 53119
Typical performance - not guaranteed values

Winding: 05WGX102-R008	**Type:** 0520M	**Enclosure:** TEFC

Nameplate Data			**460 V, 60 Hz: High Voltage Connection**	
Rated Output (HP)		1.5	**Full Load Torque**	2.22 LB-FT
Volts		230/460	**Start Configuration**	direct on line
Full Load Amps		3.8/1.9	**Breakdown Torque**	9.49 LB-FT
R.P.M.		3500	**Pull-up Torque**	3.61 LB-FT
Hz	60 **Phase**	3	**Locked-rotor Torque**	7.35 LB-FT
NEMA Design Code	B **KVA Code**	L	**Starting Current**	17.9 A
Service Factor (S.F.)		1.15	**No-load Current**	0.932 A
NEMA Nom. Eff.	84 **Power Factor**	85	**Line-line Res. @ 25ºC**	12.2 Ω
Rating - Duty		40C AMB-CONT	**Temp. Rise @ Rated Load**	43°C
S.F. Amps			**Temp. Rise @ S.F. Load**	50°C
			Locked-rotor Power Factor	60.1
			Rotor inertia	0.0553 LB-FT2

Load Characteristics 460 V, 60 Hz, 1.5 HP

% of Rated Load	**25**	**50**	**75**	**100**	**125**	**150**	**S.F.**
Power Factor	45	67	79	85	89	90	87
Efficiency	72.3	82.2	84.4	84.8	84.3	82.8	84.5
Speed	3575	3551	3526	3498	3466	3433	3479
Line amperes	1.03	1.25	1.55	1.91	2.31	2.79	2.15

ABB Motors and Mechanical Inc.

WINDING # 05WGX102

1.5 HP 3 PH 60 HZ 3500 RPM 460 V 0520M

Typical performance - not guaranteed values.

TORQUES(LB-FT): PO=9.49 PU=3.61 LR=7.35 LRA=17.9

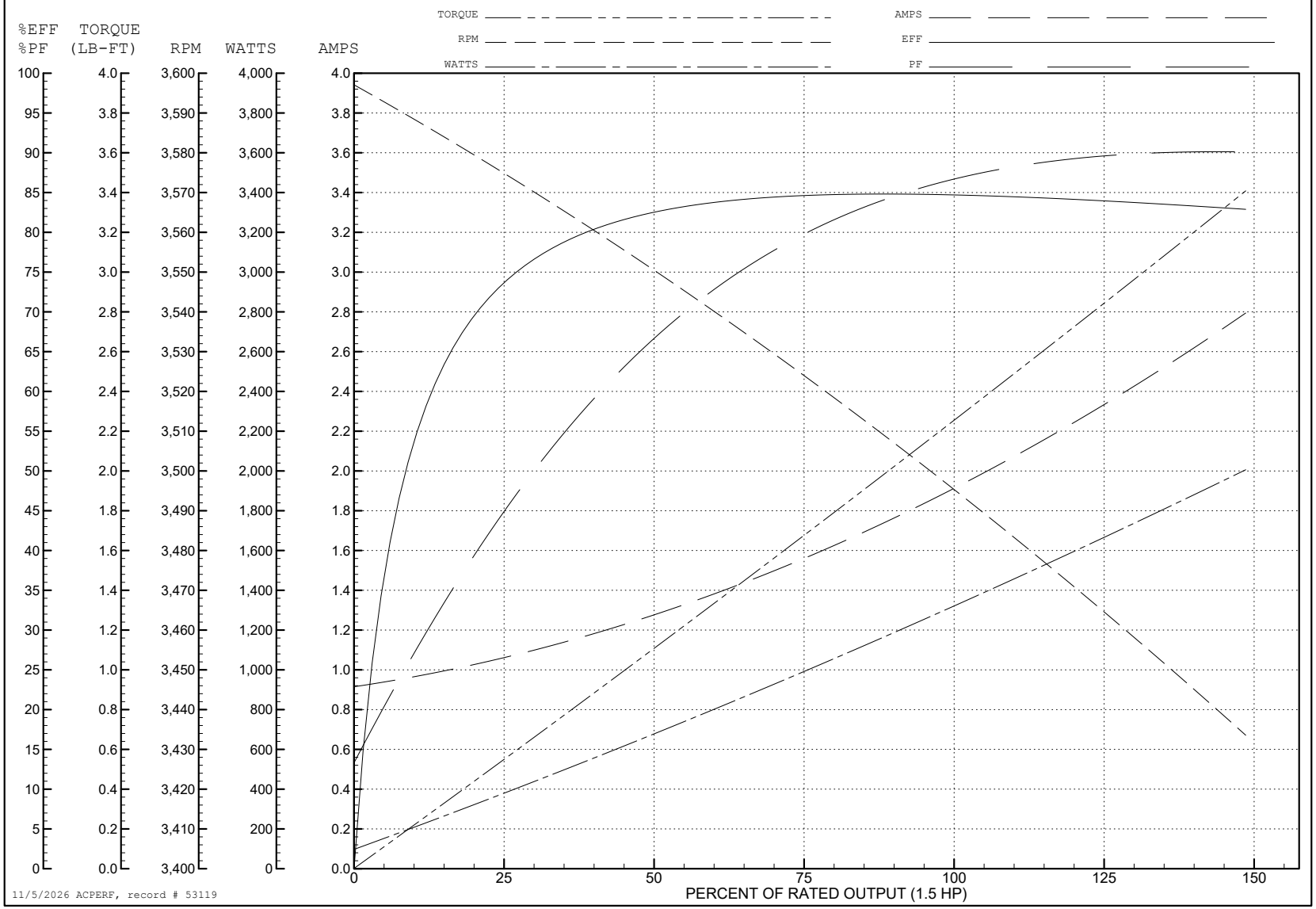

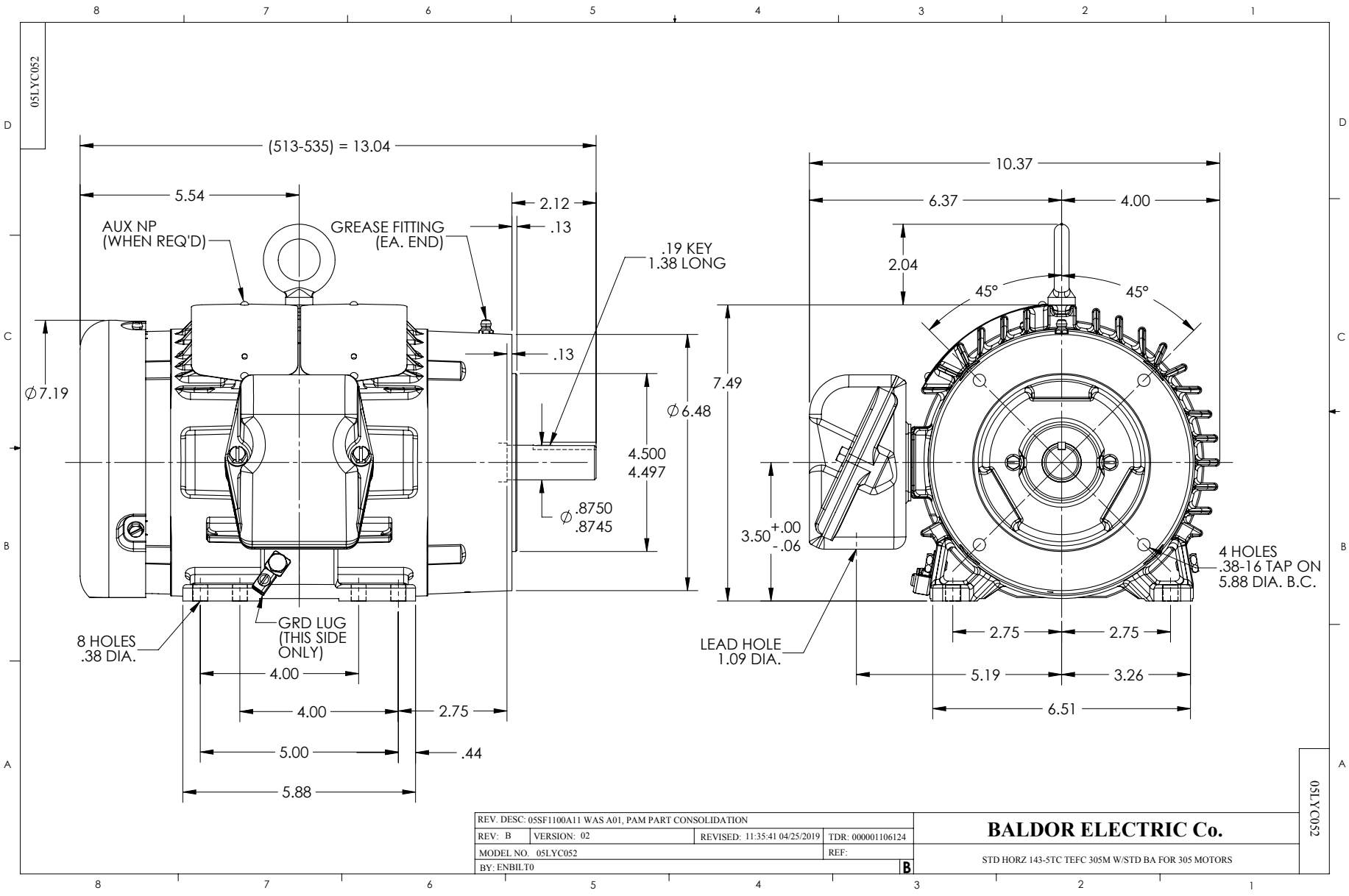
05LYC052
(513-535) = 13.04
5.54
2.12
.13
AUX NP
(WHEN REQ'D)
GREASE FITTING
(EA. END)
.19 KEY
1.38 LONG
∅7.19
.13
∅6.48
4.500
4.497
∅.8750
.8745
8 HOLES
.38 DIA.
GRD LUG
(THIS SIDE
ONLY)
4.00
4.00
2.75
5.00
.44
5.88
10.37
6.37
4.00
2.04
45°
45°
7.49
3.50 +.00 -.06
4 HOLES
.38-16 TAP ON
5.88 DIA. B.C.
LEAD HOLE
1.09 DIA.
2.75
2.75
5.19
3.26
6.51
REV. DESC: 05SF1100A11 WAS A01, PAM PART CONSOLIDATION
REV: B
VERSION: 02
REVISED: 11:35:41 04/25/2019
TDR: 000001106124
MODEL NO. 05LYC052
REF:
BY: ENBILT0
B
BALDOR ELECTRIC Co.
STD HORZ 143-5TC TEFC 305M W/STD BA FOR 305 MOTORS
05LYC052

CD0005

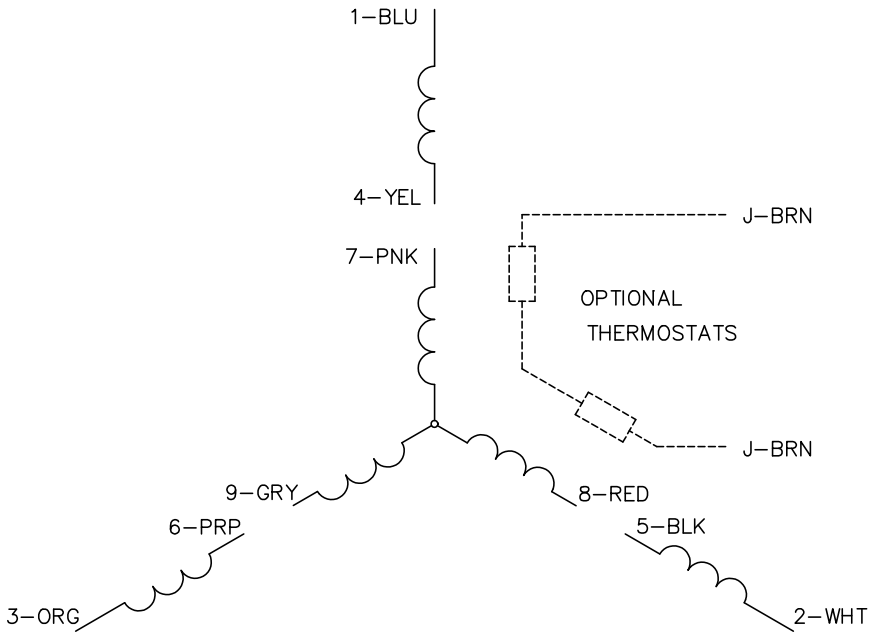

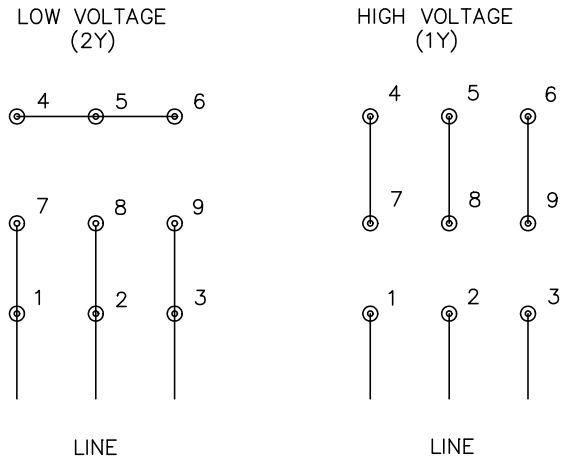

NOTES:

1. INTERCHANGE ANY TWO LINE LEADS TO REVERSE ROTATION.
2. OPTIONAL THERMOSTATS ARE PROVIDED WHEN SPECIFIED.
3. ACTUAL NUMBER OF INTERNAL PARALLEL CIRCUITS MAY BE A MULTIPLE OF THOSE SHOWN ABOVE.
4. LEAD COLORS ARE OPTIONAL. LEADS MUST ALWAYS BE NUMBERED AS SHOWN.

CD0005

REV. DESC: REVISE TO SHOW OPTIONAL COLORS			BALDOR ELECTRIC Co.
REV. LTR: E	BY: JLP	REVISED: 01/19/99 10:15	TDR: 0171435
CD0005		FILE: AAA00005140	MDL: –
		MTL: –	3PH, DV, 9 LEADS