WESTGATE
THE FUTURE IS HERE... AND IT'S QUITE BRIGHT!

EVC-PEDESTAL-4.5FT

Installation and Operation Manual

Version A1

Copyright Information

No part of this manual may be reproduced, stored in a retrieval system or transmitted, in any form or by any means, electronic, mechanical, photocopying, recording, or otherwise without the prior written permission of WESTGATE.

Disclaimer of Warranties and Limitation of Liabilities

All information, specifications and illustrations in this manual are based on the latest information available at the time of printing.

WESTGATE reserves the right to make changes at any time without notice. While information of this manual has been carefully checked for accuracy, no guarantee is given for the completeness and correctness of the contents, including but not limited to the product specifications, functions, and illustrations.

WESTGATE will not be liable for any direct, special, incidental, indirect damages or any economic consequential damages (including the loss of profits).

For Services and Support (Mon - Fri / 8:00 am - 5:00 pm)

Web: www.westgatemfg.com

Tel: 1-323-826-9490

Email: Customerservice@westgatemfg.com

Address: 2462 E 28th Street, Vernon, CA 90058, USA

Revision History

Version	Date	Descriptions
Version A0	2025.06	Initial version
Version A1	2025.07	

Content

1 Product Dimensions..... 8
2 Package Diagram..... 8
3 In the Box..... 12
4 Installation instructions..... 12
4.1 Concrete base requirement..... 12
4.2 Installing the Mounting Template..... 13

1 Product Dimensions

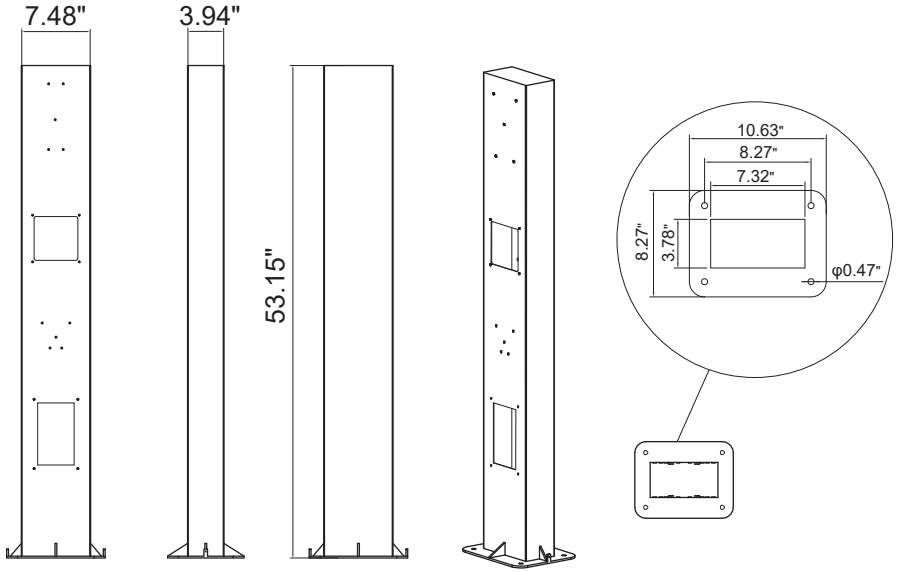

2 Package Diagram

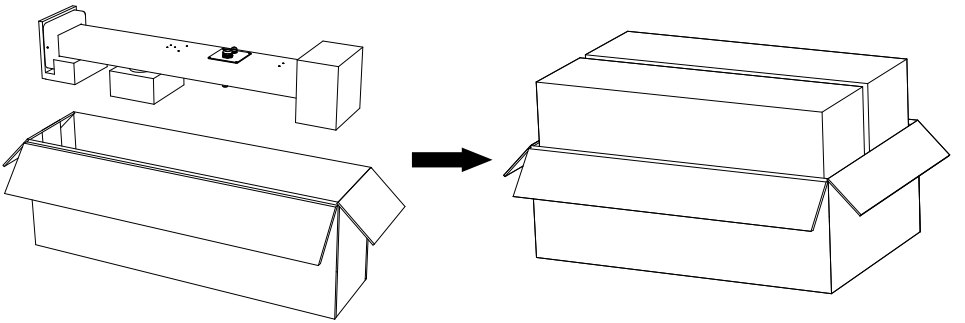

3 In the Box

Ensure that all parts are delivered according to the order. Check the packages for the following parts.

Pedestal 1 PC		Screw M5x12 4 PCS		User manual 1 PC	

4 Installation instructions

4.1 Concrete base requirement:

The built concrete pad should be compliance with local regulatory requirements. The following dimension or struction related descriptions are the minimum requirement only.

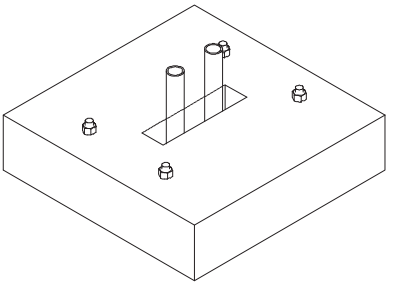

Fig.1

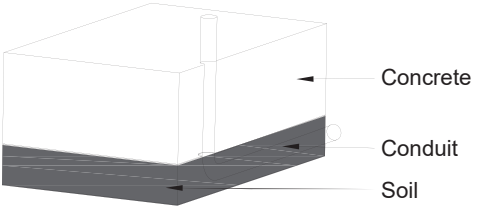

Fig.2

The schematic of concrete pad

Cable Conduit Suggest
Charging current 40A : Use 3/4" conduit.

4.2 Installing the Mounting Template

● First, need build the concrete pad for pedestal, the compressive strength must be over 3000psi, reference picture is shown as Fig.1 & Fig.2,.

● Please mount 4 pieces of M10 x 150mm anchor bolts on the concrete pad based on the dimensions below. The height of the bolt should be at least 0.86" (22mm) above the concrete pad and depth of bolt is at least 90 mm (3.54").

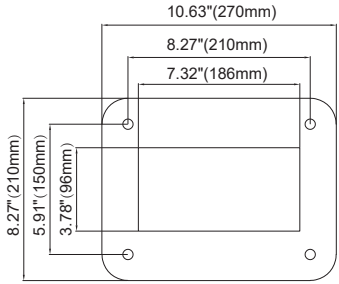

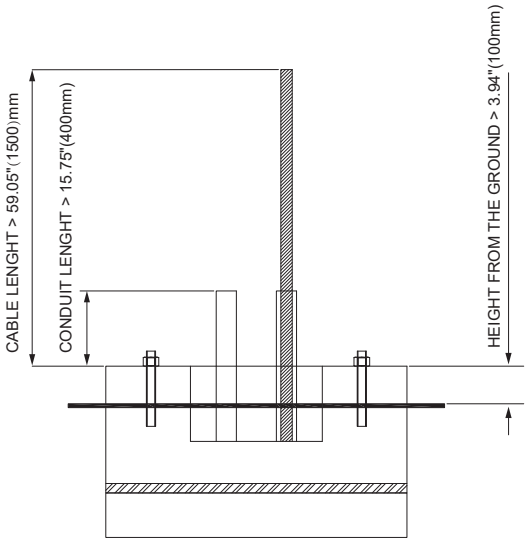

Concrete

● The bolts must protrude at least 25.4 mm (1 inch) above the concrete foundation. The embedment depth of the bolts must be at least 121.9mm (4.8inches).

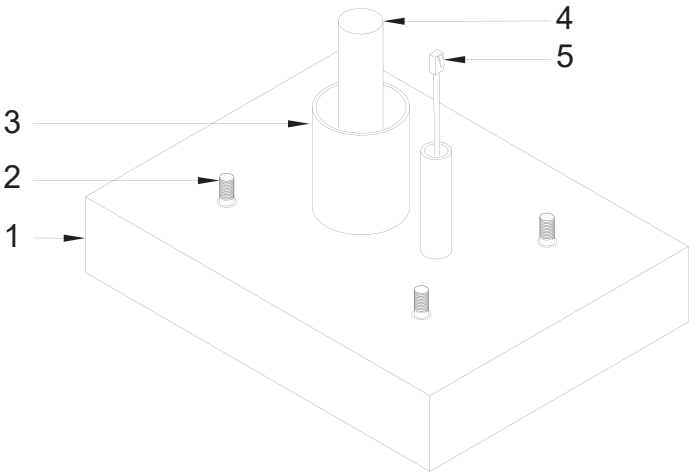

NO	NAME	DEMAND
1	Concrete Foundation	/
2	L shape Foundation Bolts	Above concrete foundation > 1" (25.4 mm)
3	Cable Conduit	Above concrete foundation > 3.94" (100 mm)
4	AC Power Cable	Above concrete foundation > 15.75" (400 mm)
5	Ethernet Cable	Above concrete foundation > 59.1" (1500mm)

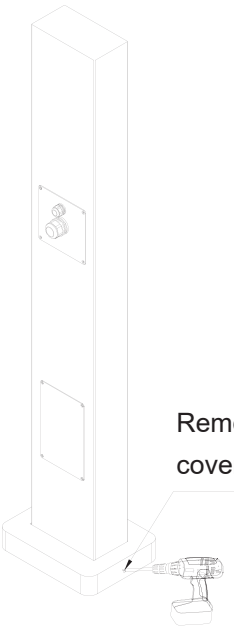

Remove the two screws of the base cover, and then lift the base cover.

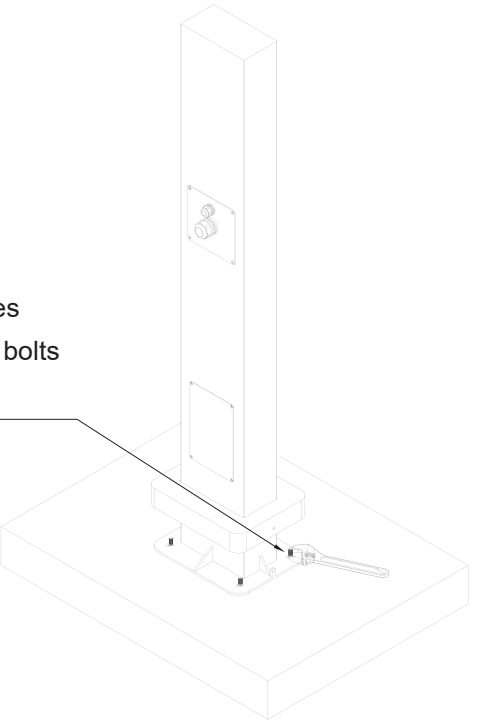

Align the base mounting holes with the concrete foundation bolts and then tighten the screws.

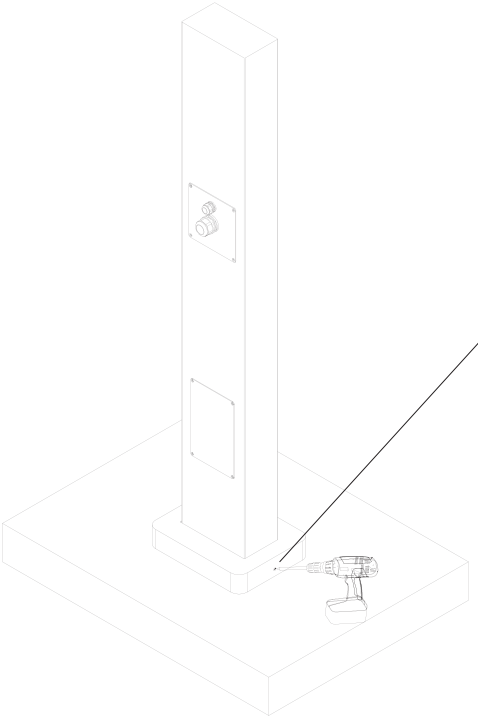

Tighten the two screws of the cover plate to secure the base cover.

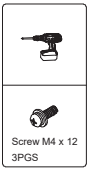

Install the hook

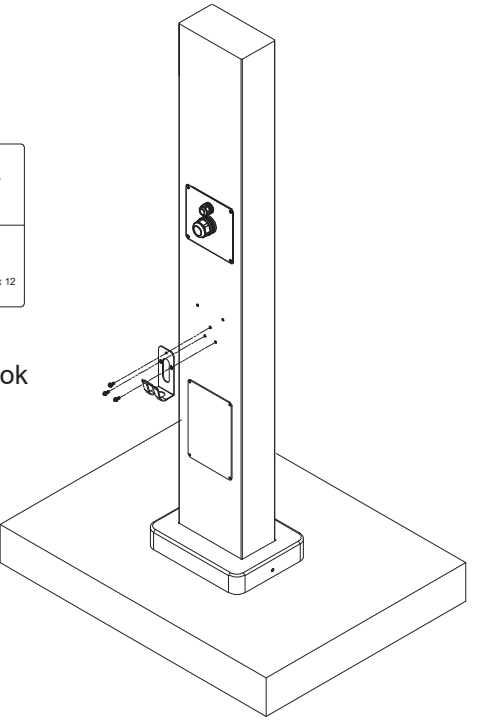

WESTGATE

THE FUTURE IS HERE... AND IT'S QUITE BRIGHT!

www.westgatemfg.com